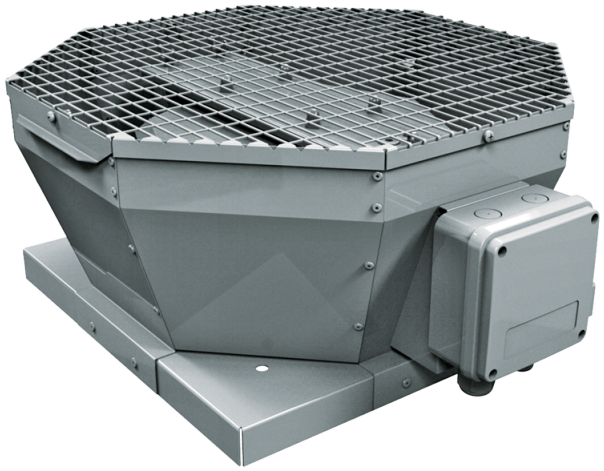

Tower-V EC

Roof centrifugal fans with vertical air discharge with EC-motors

• Impeller type: Centrifugal impeller with backward curved blades
• Casing material: Coated steel

Lineup	Rated power, W	Maximum airflow, m³/h
 Tower-V EC 190	102	670
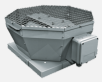 Tower-V EC 225	101	1290
 Tower-V EC 250	161	1470
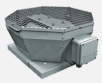 Tower-V EC 280	182	2330
 Tower-V EC 310	391	3100
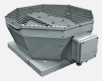 Tower-V EC 355	669	3830
 Tower-V EC 400	526	5380

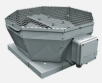 Tower-V EC 450	1323	8110
 Tower-V EC 500	1350	10900
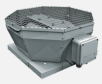 Tower-V EC 560	2412	13640
 Tower-V EC 630	2973	18270