

Wind-K 125 T

Window extract fans

- Sound pressure level LpA at 3 m: 35
- Casing material: Plastic
- Timer: Turn off timer

	Unit of measurement	Wind-K 125 T
Connected air duct size	mm	125
Maximum supply voltage	V	240
Minimum supply voltage	V	220
Power supply frequency	Hz	50
Rated power	W	22
Unit current	A	0.1
Maximum airflow	m^3/h	185
Rotation speed at 50hz	-	2400
Sound pressure level LpA at 3 m	dB(A)	35
Ambient air temperature min	°C	1
Ambient air temperature max	°C	40
Ingress protection rating	-	IP24
Impeller material	-	Plastic

Dimensions

a	b	g	h
186	173	183	160

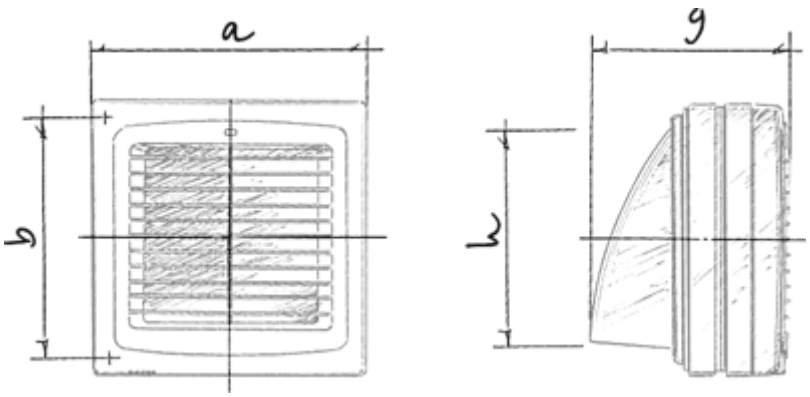
a
b
g
h

Ecodesign

Trademark	Blauberg					
Model	Wind-K 125 T					
Specific energy consumption (SEC) (kWh/(m²/a))	Cold		Average		Warm	
	-28.2	B	-13.2	E	-4.6	F
Type of ventilation unit	Unidirectional					
Type of drive installed	Multi-speed					
Type of heat recovery system	None					
Maximum flow rate (m³/h)	185					
Electric power input (W)	22					
Reference flow rate (m³/s)	0.036					
Specific power input (SPI) (W/(m³/h))	0.076					
Control typology	Clock control					
Maximum external leakage rates (%)	2.7					
Airflow sensitivity at +20 Pa and -20 Pa (%)	0.15					
The indoor/outdoor air tightness (m³/h)	1					
Declared typology	RVU UVU					
Sound power level (dB(A))	55					
The annual electricity consumption (AEC) (kWh/a)	Cold		Average		Warm	
	100		100		100	
The annual heating saved (AHS) (kWh/a)	Cold		Average		Warm	
	3075		1572		711	

Accessories

Thyristor speed controllers

Name	Photo	Description
CDT E1.8		Thyristor speed controller