

# VK 80

Air dampers for round ducts

- Casing material: Galvanized steel

| | Unit of measurement | VK 80 |
|---|---|---|
| Connected air duct size | mm | 80 |
| Weight | kg | 0.57 |

## Dimensions

| ØD | B | L |
|---|---|---|
| 79 | 140 | 200 |

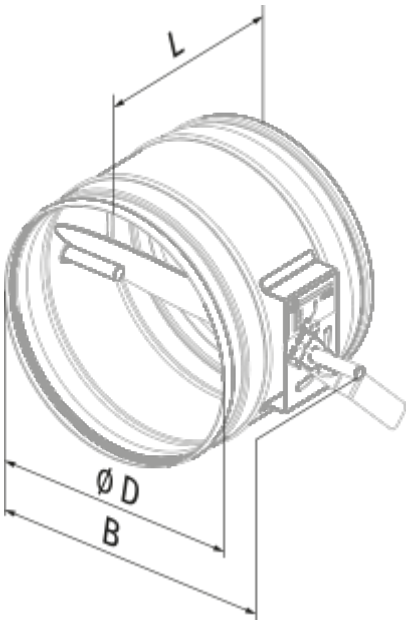
L
Ø D
B