

# VK 60x35

Air dampers for rectangular ducts

- Casing material: Galvanized steel

| | Unit of measurement | VK 60x35 |
|---|---|---|
| Weight | kg | 5.1 |

## Dimensions

| B | B1 | B2 | H | H1 | L |
|---|---|---|---|---|---|
| 600 | 640 | 660 | 350 | 390 | 202 |

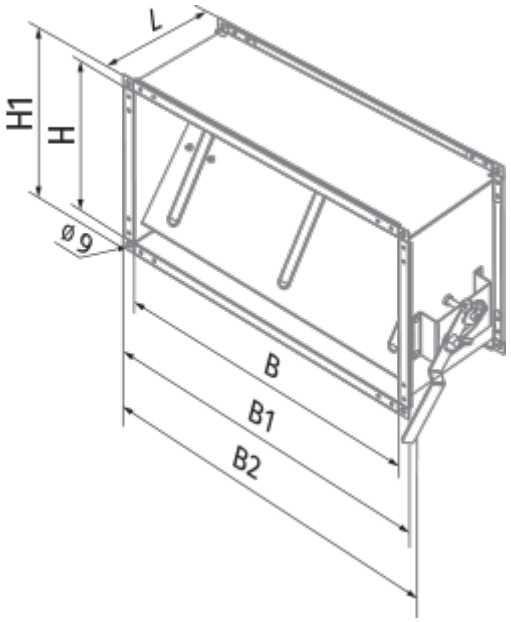
L
H1
H
ø9
B
B1
B2