

VK 50x30

Air dampers for rectangular ducts

- Casing material: Galvanized steel

	Unit of measurement	VK 50x30
Weight	kg	3.1

Dimensions

B	B1	B2	H	H1	L
500	540	560	300	340	202

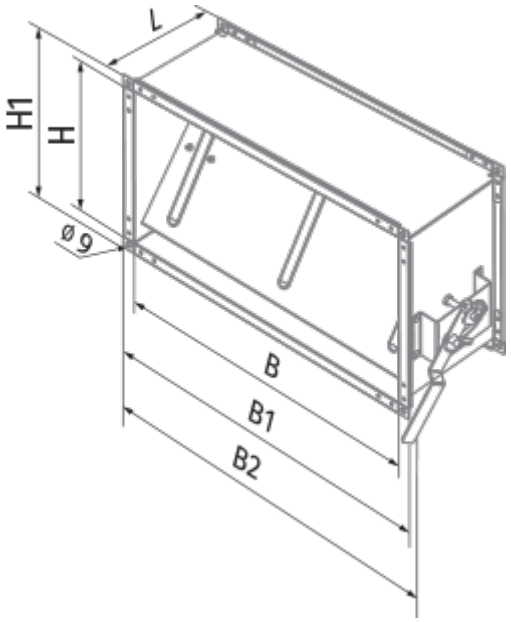
L
H1
H
ø9
B
B1
B2