

VK 50x25

Air dampers for rectangular ducts

- Casing material: Galvanized steel

	Unit of measurement	VK 50x25
Weight	kg	3.8

Dimensions

B	B1	B2	H	H1	L
500	540	560	250	290	202

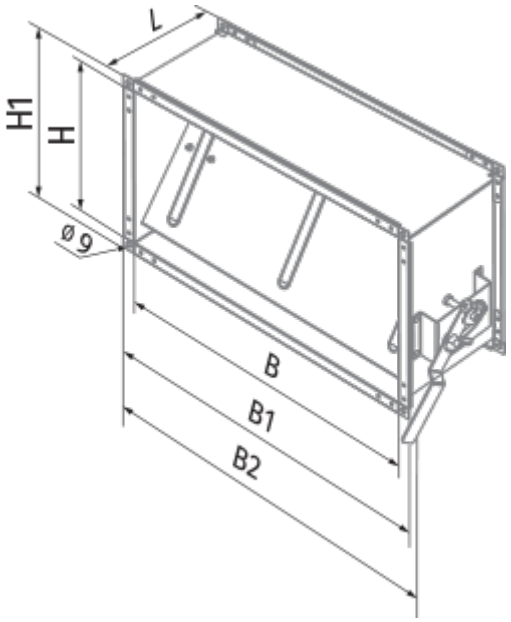
L
H1
H
ø9
B
B1
B2