

VK 400

Air dampers for round ducts

- Casing material: Galvanized steel

	Unit of measurement	VK 400
Connected air duct size	mm	400
Weight	kg	3.38

Dimensions

ØD	B	L
399	470	240

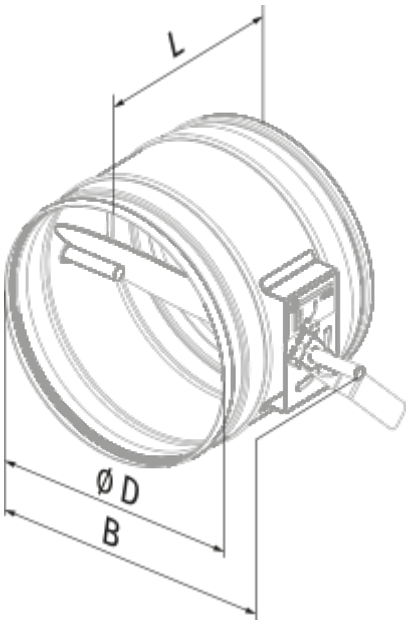
L
Ø D
B