

VK 160

Air dampers for round ducts

- Casing material: Galvanized steel

	Unit of measurement	VK 160
Connected air duct size	mm	160
Weight	kg	1.01

Dimensions

ØD	B	L
159	230	200

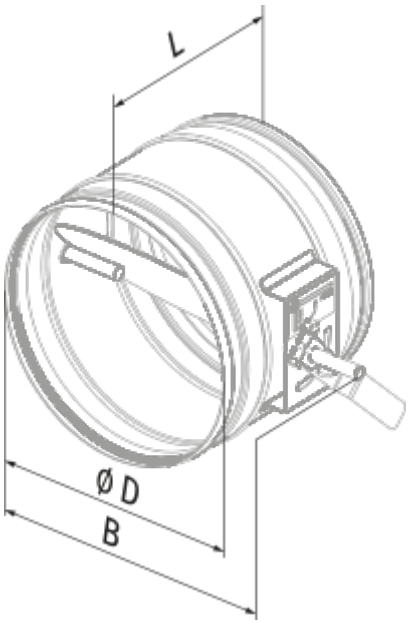
L
Ø D
B