

VENTO Eco A50-4 S11 Pro

Heat recovery single-room units

- Air flow in heat recovery mode: 25
- Sound pressure level LpA at 3 m: 20
- Sound pressure level LpA at 1 m: 29
- Heat exchanger type: Regenerative
- Heat exchanger material: Ceramic
- Filter: G3 (Option: F8 PM2.5 > 99 %)
- Sound-insulated casing
- Control: Wired control panel
- Casing material: Plastic

	Unit of measurement	VENTO Eco A50-4 S11 Pro		
Maximum supply voltage	V	240		
Minimum supply voltage	V	100		
Power supply frequency	Hz	50/60		
Rated power	W	1	2.1	4.3
Unit current	A	0.017	0.025	0.041
Air flow in ventilation mode	m³/h	15	30	50
Air flow in heat recovery mode	m³/h	8	15	25
Rotation speed at 50hz	-	915	1555	2330
Sound pressure level LpA at 3 m	dB(A)	12	18	20
Sound pressure level LpA at 1 m	dB(A)	21	27	29
Heat recovery efficiency, max	%	92		
Heat exchanger type	-	Regenerative		
Heat exchanger material	-	Ceramic		
Filter	-	G3 (Option: F8 PM2.5 > 99 %)		
Transported air temperature (max)	°C	40		
Transported air temperature (min)	°C	-20		
Ambient air temperature min	°C	1		
Ambient air temperature max	°C	40		
Ingress protection rating	-	IP24		
Ambient air humidity max	%	65		

Maximum wall thickness	mm	490

Dimensions

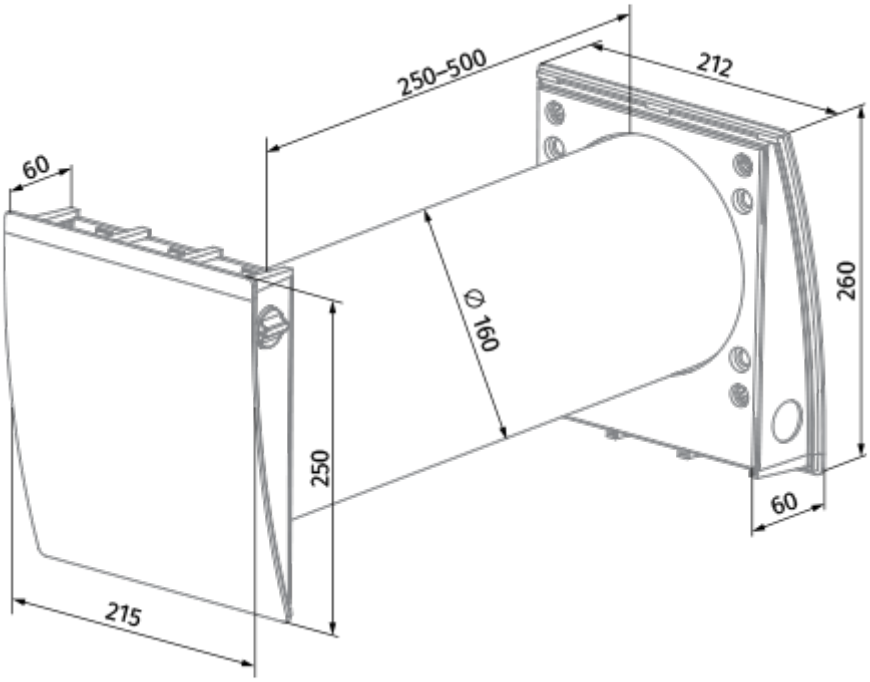

Ecodesign

Trademark	Blauberg					
Model	VENTO Eco A50-4 S11 Pro					
Specific energy consumption (SEC) (kWh/(m²/a))	Cold		Average		Warm	
	-75.8	A+	-36.5	A	-14.1	E
Type of ventilation unit	Bidirectional					
Type of drive installed	3-speed					
Type of heat recovery system	Regenerative					
Thermal efficiency of heat recovery (%)	76					
Maximum flow rate (m³/h)	25					
Electric power input (W)	4.3					
Reference flow rate (m³/s)	0.004					
Specific power input (SPI) (W/(m³/h))	0.14					
Control typology	Clock control					
Airflow sensitivity at +20 Pa and -20 Pa (%)	0.26					
Declared typology	RVU BVU					
Sound power level (dB(A))	38					
The annual electricity consumption (AEC) (kWh/a)	Cold		Average		Warm	
	179		179		179	

Accessories

Other accessories

Name	Photo	Description
R 160-500		Air duct 160 mm and polystyrene foam plug
R 160-700	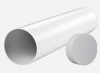	Air duct 160 mm and polystyrene foam plug
ZL1 Vento 160/150		
FP Vento Eco A50 G3		G3 filters (2 pcs.)

Hoods

Name	Photo	Description
AH-S chrome 160		Stainless steel ventilation hood
AH-S white 160		Stainless steel ventilation hood
AH-10 beige 160		Plastic hoods decoration of supply and exhaust vents of public, residential and industrial ventilation systems
AH-10 black 160		Plastic hoods decoration of supply and exhaust vents of public, residential and industrial ventilation systems
AH-10 brown 160		Plastic hoods decoration of supply and exhaust vents of public, residential and industrial ventilation systems
AH-10 chrome 160		Plastic hoods decoration of supply and exhaust vents of public, residential and industrial ventilation systems
AH-10 grey 160		Plastic hoods decoration of supply and exhaust vents of public, residential and industrial ventilation systems
AH-10 terracotta 160		Plastic hoods decoration of supply and exhaust vents of public, residential and industrial ventilation systems
AH-10 white 160		Plastic hoods decoration of supply and exhaust vents of public, residential and industrial ventilation systems
AH-11 vintage 160		Plastic hoods decoration of supply and exhaust vents of public, residential and industrial ventilation systems
AH-11 black 160		Plastic hoods decoration of supply and exhaust vents of public, residential and industrial ventilation systems
AH-11 brown 160		Plastic hoods decoration of supply and exhaust vents of public, residential and industrial ventilation systems
AH-11 grey 160		Plastic hoods decoration of supply and exhaust vents of public, residential and industrial ventilation systems
AH-11 terracotta 160		Plastic hoods decoration of supply and exhaust vents of public, residential and industrial ventilation systems

AH-11 white 160		Plastic hoods decoration of supply and exhaust vents of public, residential and industrial ventilation systems
PP 160/0.5		The outer hood is designed to prevent the ingress of water and large objects into the ventilation equipment from outside
AH-8 white 160		Outer ventilation hood with frost protection for a cold climate
AH-8 chrome 160		Outer ventilation hood with frost protection for a cold climate

Plastic

Name	Photo	Description
KIT BlauPlast white 160		Kit for angular mounting (for walls with standard thickness)
KIT BlauPlast chrome 160		Kit for angular mounting (for walls with standard thickness)