

# VENTO Eco A50-4 S Pro

Heat recovery single-room units

- Air flow in heat recovery mode: 25
- Sound pressure level LpA at 3 m: 20
- Sound pressure level LpA at 1 m: 29
- Heat exchanger type: Regenerative
- Heat exchanger material: Ceramic
- Filter: G3 (Option: F8 PM2.5 > 99 %)
- Sound-insulated casing
- Control: Wired control panel

| | Unit of measurement | VENTO Eco A50-4 S Pro | | |
|---|---|---|---|---|
| Maximum supply voltage | V | 240 | | |
| Minimum supply voltage | V | 100 | | |
| Power supply frequency | Hz | 50/60 | | |
| Rated power | W | 1 | 2.1 | 4.3 |
| Unit current | A | 0.017 | 0.025 | 0.041 |
| Air flow in ventilation mode | m³/h | 15 | 30 | 50 |
| Air flow in heat recovery mode | m³/h | 8 | 15 | 25 |
| Rotation speed at 50hz | - | 915 | 1555 | 2330 |
| Sound pressure level LpA at 3 m | dB(A) | 12 | 18 | 20 |
| Sound pressure level LpA at 1 m | dB(A) | 21 | 27 | 29 |
| Heat recovery efficiency, max | % | 92 | | |
| Heat exchanger type | - | Regenerative | | |
| Heat exchanger material | - | Ceramic | | |
| Filter | - | G3 (Option: F8 PM2.5 > 99 %) | | |
| Transported air temperature (max) | °C | 40 | | |
| Transported air temperature (min) | °C | -20 | | |
| Ambient air temperature min | °C | 1 | | |
| Ambient air temperature max | °C | 40 | | |
| Ingress protection rating | - | IP24 | | |
| Ambient air humidity max | % | 65 | | |

| | | |
|---|---|---|
| Maximum wall thickness | mm | 490 |

## Dimensions

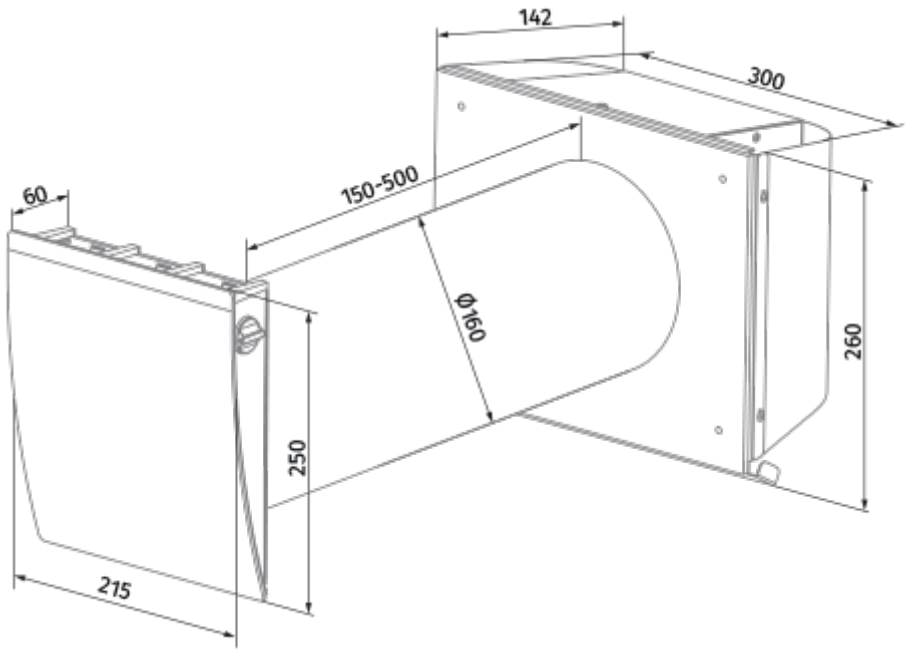

## Ecodesign

| | | | | | | |
|---|---|---|---|---|---|---|
| Trademark | Blauberg | | | | | |
| Model | VENTO Eco A50-4 S Pro | | | | | |
| Specific energy consumption (SEC) (kWh/(m²/a)) | Cold | | Average | | Warm | |
| | -75.8 | A+ | -36.5 | A | -14.1 | E |
| Type of ventilation unit | Bidirectional | | | | | |
| Type of drive installed | 3-speed | | | | | |
| Type of heat recovery system | Regenerative | | | | | |
| Thermal efficiency of heat recovery (%) | 76 | | | | | |
| Maximum flow rate (m³/h) | 25 | | | | | |
| Electric power input (W) | 4.3 | | | | | |
| Reference flow rate (m³/s) | 0.004 | | | | | |
| Specific power input (SPI) (W/(m³/h)) | 0.14 | | | | | |
| Control typology | Clock control | | | | | |
| Airflow sensitivity at +20 Pa and -20 Pa (%) | 0.26 | | | | | |
| Declared typology | RVU BVU | | | | | |
| Sound power level (dB(A)) | 38 | | | | | |
| The annual electricity consumption (AEC) (kWh/a) | Cold | | Average | | Warm | |
| | 179 | | 179 | | 179 | |

## Accessories

### Other accessories

| Name | Photo | Description |
|---|---|---|
| R 160-500 |  | Air duct 160 mm and polystyrene foam plug |
| R 160-700 | 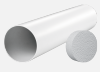 | Air duct 160 mm and polystyrene foam plug |
| ZL1 Vento 160/150 | | |
| FP Vento Eco A50 G3 |  | G3 filters (2 pcs.) |

### Hoods

| Name | Photo | Description |
|---|---|---|
| AH-S chrome 160 |  | Stainless steel ventilation hood |
| AH-S white 160 |  | Stainless steel ventilation hood |
| AH-10 beige 160 |  | Plastic hoods decoration of supply and exhaust vents of public, residential and industrial ventilation systems |
| AH-10 black 160 |  | Plastic hoods decoration of supply and exhaust vents of public, residential and industrial ventilation systems |
| AH-10 brown 160 |  | Plastic hoods decoration of supply and exhaust vents of public, residential and industrial ventilation systems |
| AH-10 chrome 160 |  | Plastic hoods decoration of supply and exhaust vents of public, residential and industrial ventilation systems |
| AH-10 grey 160 |  | Plastic hoods decoration of supply and exhaust vents of public, residential and industrial ventilation systems |
| AH-10 terracotta 160 |  | Plastic hoods decoration of supply and exhaust vents of public, residential and industrial ventilation systems |
| AH-10 white 160 |  | Plastic hoods decoration of supply and exhaust vents of public, residential and industrial ventilation systems |
| AH-11 vintage 160 |  | Plastic hoods decoration of supply and exhaust vents of public, residential and industrial ventilation systems |
| AH-11 black 160 |  | Plastic hoods decoration of supply and exhaust vents of public, residential and industrial ventilation systems |
| AH-11 brown 160 |  | Plastic hoods decoration of supply and exhaust vents of public, residential and industrial ventilation systems |
| AH-11 grey 160 |  | Plastic hoods decoration of supply and exhaust vents of public, residential and industrial ventilation systems |
| AH-11 terracotta 160 |  | Plastic hoods decoration of supply and exhaust vents of public, residential and industrial ventilation systems |

| | | |
|---|---|---|
| AH-11 white 160 |  | Plastic hoods decoration of supply and exhaust vents of public, residential and industrial ventilation systems |
| PP 160/0.5 |  | The outer hood is designed to prevent the ingress of water and large objects into the ventilation equipment from outside |
| AH-8 white 160 |  | Outer ventilation hood with frost protection for a cold climate |
| AH-8 chrome 160 |  | Outer ventilation hood with frost protection for a cold climate |

**Plastic**

| Name | Photo | Description |
|---|---|---|
| KIT BlauPlast white 160 |  | Kit for angular mounting (for walls with standard thickness) |
| KIT BlauPlast chrome 160 |  | Kit for angular mounting (for walls with standard thickness) |