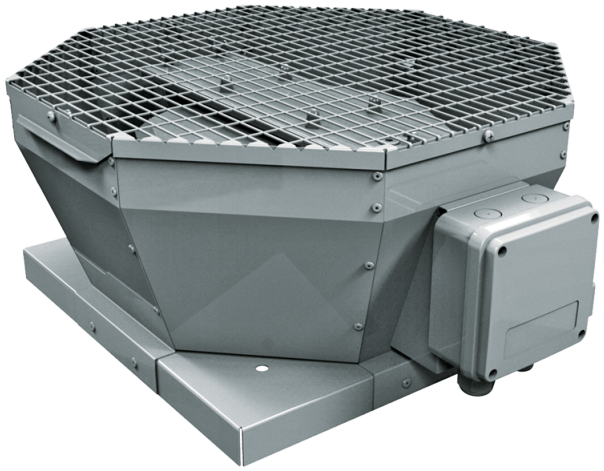

Tower-V EC 400

Roof centrifugal fans with vertical air discharge with EC-motors

- Sound pressure level LpA at 3 m: 58
- Impeller type: Centrifugal impeller with backward curved blades
- Casing material: Coated steel

	Unit of measurement	Tower-V EC 400
Phases	-	1
Maximum supply voltage	V	230
Minimum supply voltage	V	230
Power supply frequency	Hz	50/60
Rated power	W	526
Unit current	A	3.9
Maximum airflow	m^3/h	5380
Rotation speed at 50hz	-	1450
Sound pressure level LpA at 3 m	dB(A)	58
Weight	kg	27
Transported air temperature (max)	°C	50
Transported air temperature (min)	°C	-25
Ingress protection rating	-	IPX4
Ingress protection rating of the drive	-	IP54
Impeller material	-	Aluminium
Size	mm	400

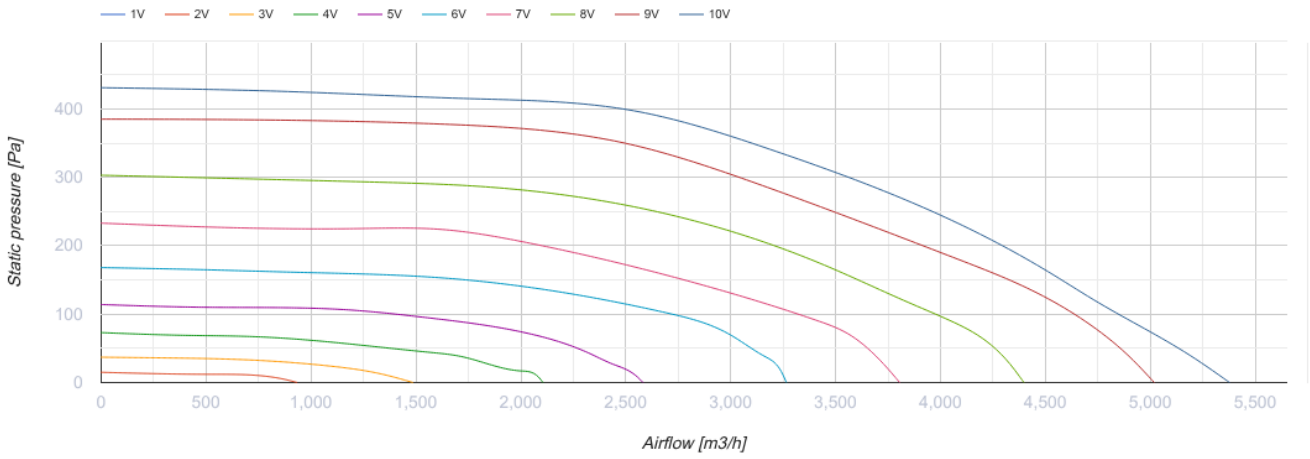

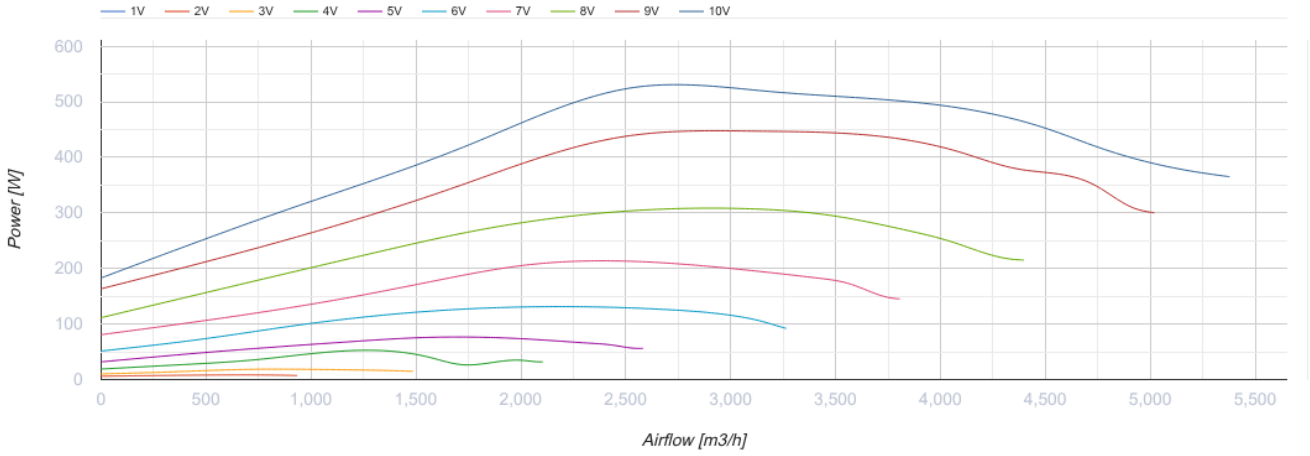

Dimensions

L	L1	H	L2
738	598	371	53

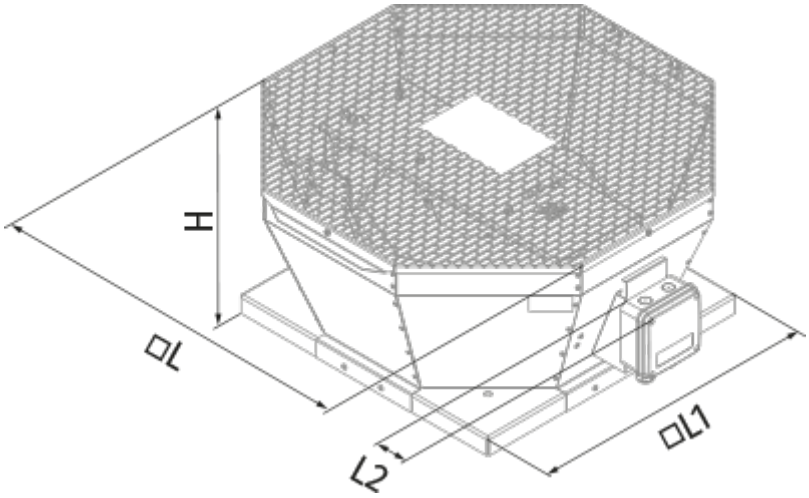

Ecodesign

Trademark	Blauberg
Model	Tower-V EC 400
Type of ventilation unit	Unidirectional
Type of drive installed	Integrated VSD
Type of heat recovery system	None
Nominal external pressure (Pa)	420
Maximum external leakage rates (%)	2.7
Static efficiency (%)	53.3
Sound power level (dB(A))	73
Effective electric power input (kW)	0.77
Declared typology	NRVU UVU

Accessories

EC motors regulators

Name	Photo	Description
CDT E/0-10		Speed control for EC motors