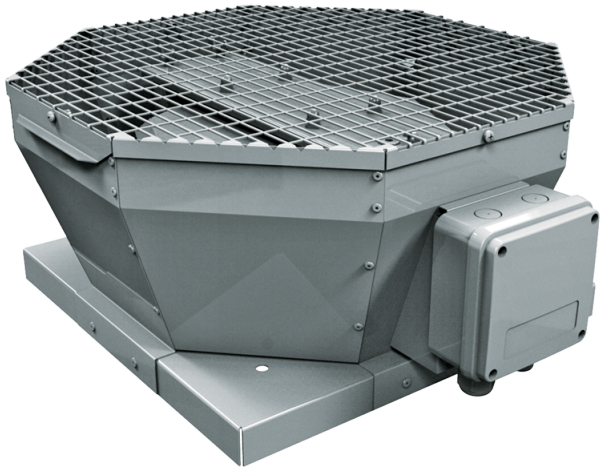

Tower-V EC 280

Roof centrifugal fans with vertical air discharge with EC-motors

- Sound pressure level LpA at 3 m: 48
- Impeller type: Centrifugal impeller with backward curved blades
- Casing material: Coated steel

	Unit of measurement	Tower-V EC 280
Phases	-	1
Minimum supply voltage	V	230
Maximum supply voltage	V	230
Power supply frequency	Hz	50/60
Rated power	W	182
Unit current	A	1.34
Maximum airflow	m^3/h	2330
Rotation speed at 50hz	-	2610
Sound pressure level LpA at 3 m	dB(A)	48
Weight	kg	13
Transported air temperature (max)	°C	60
Transported air temperature (min)	°C	-20
Ingress protection rating	-	IPX4
Ingress protection rating of the drive	-	IP44
Impeller material	-	Galvanized steel
Size	mm	280

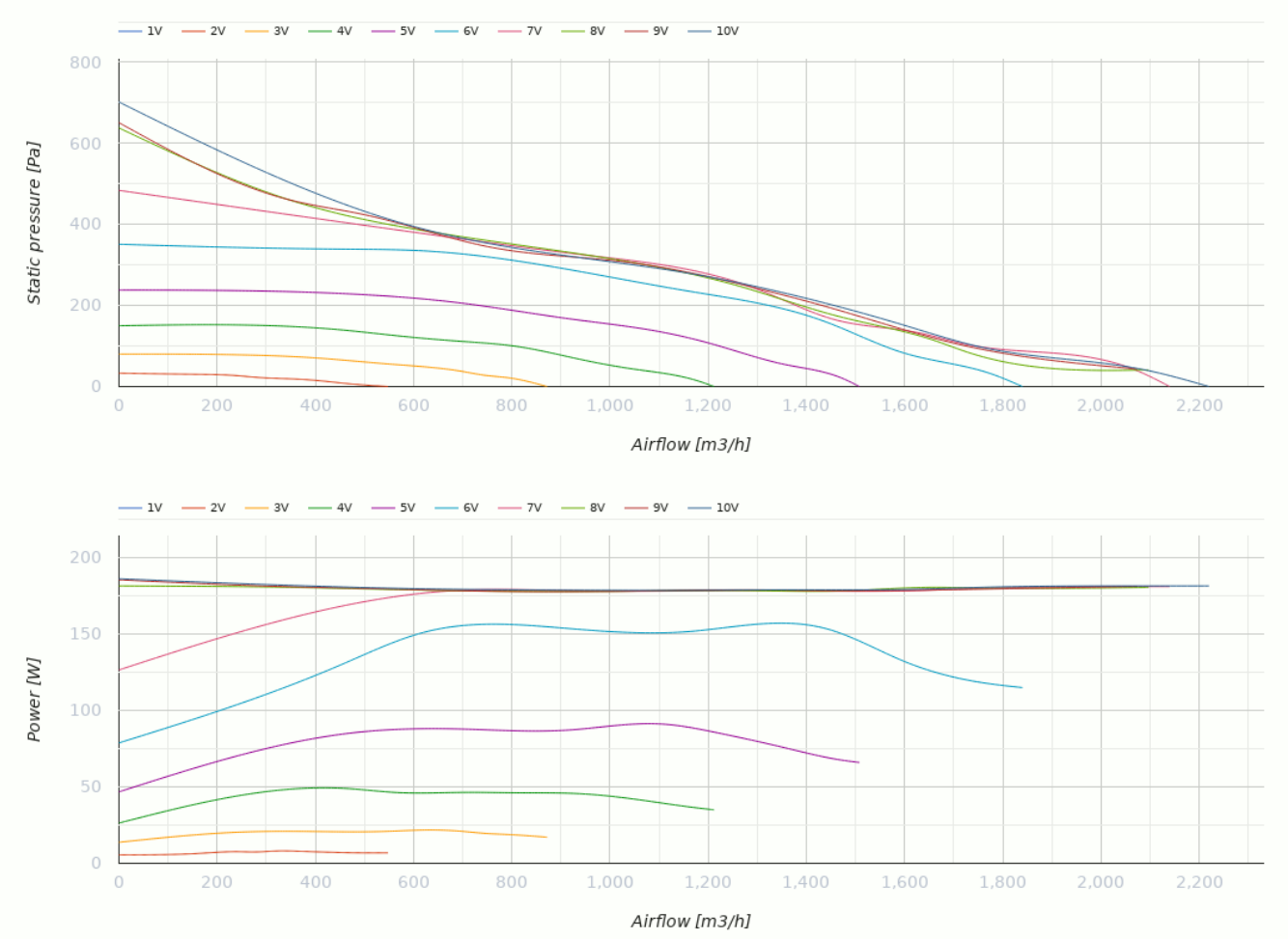

Dimensions

L	L1	H	L2
547	425	274	53

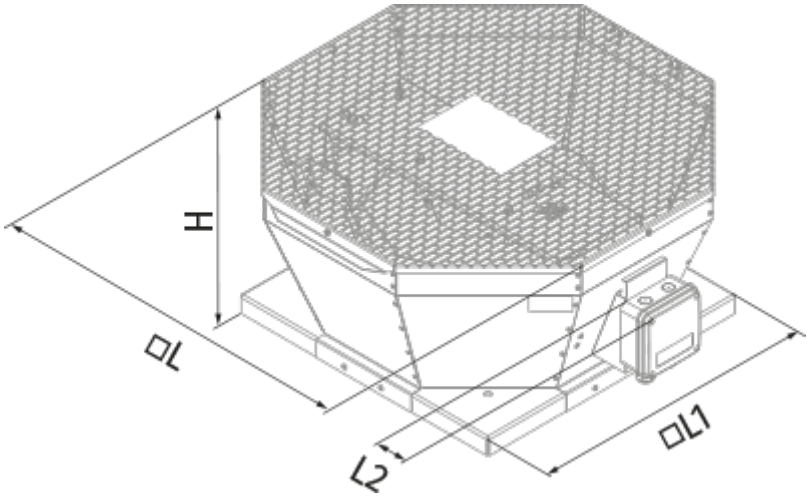

Ecodesign

Trademark	Blauberg
Model	Tower-V EC 280
Type of ventilation unit	Unidirectional
Type of drive installed	Integrated VSD
Type of heat recovery system	None
Nominal external pressure (Pa)	423
Maximum external leakage rates (%)	2.7
Static efficiency (%)	52.2
Declared typology	NRVU UVU
Effective electric power input (kW)	0.425
Sound power level (dB(A))	67

Accessories

EC motors regulators

Name	Photo	Description
CDT E/0-10		Speed control for EC motors