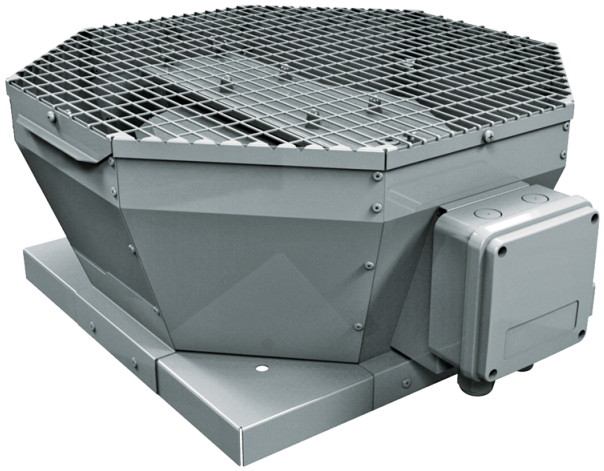

Tower-V 500 4D

Roof centrifugal fans with vertical air discharge

- Sound pressure level LpA at 3 m: 62
- Impeller type: Centrifugal impeller with backward curved blades
- Casing material: Coated steel

	Unit of measurement	Tower-V 500 4D
Phases	-	3
Minimum supply voltage	V	400
Maximum supply voltage	V	400
Power supply frequency	Hz	50
Rated power	W	1527
Unit current	A	2.64
Maximum airflow	m^3/h	8435
Rotation speed at 50hz	-	1460
Sound pressure level LpA at 3 m	dB(A)	62
Weight	kg	52
Transported air temperature (max)	°C	50
Transported air temperature (min)	°C	-30
Ingress protection rating	-	IPX4
Ingress protection rating of the drive	-	IP54
Impeller material	-	Aluminium
Size	mm	500

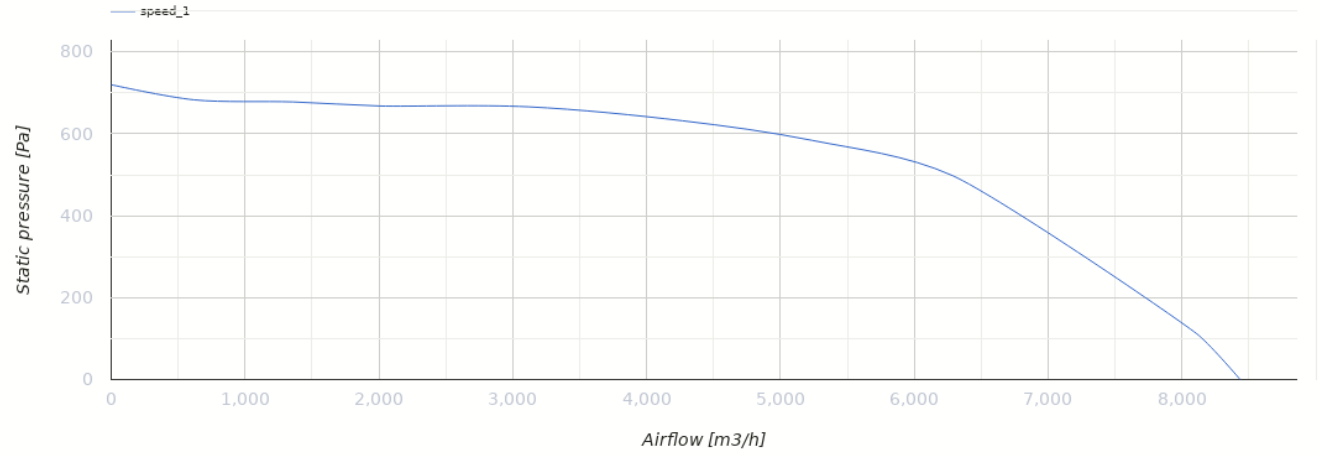

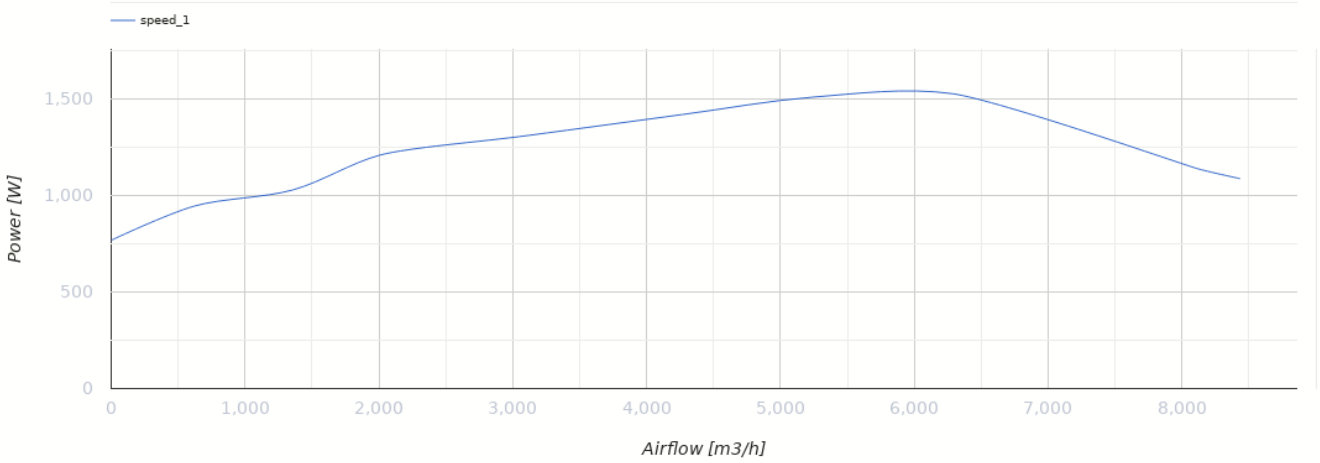

Dimensions

ØD	H	L	L1
430	460	859	668

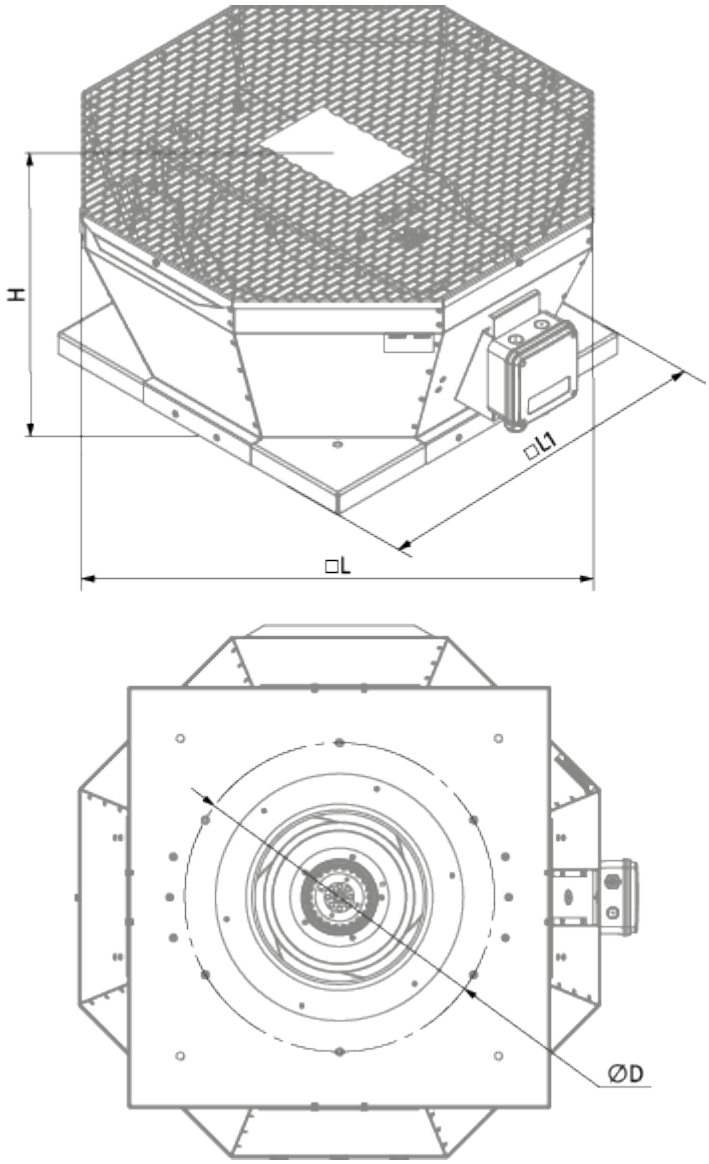

Accessories

Thyristor speed controllers

Name	Photo	Description
CDT E1.8		Thyristor speed controller