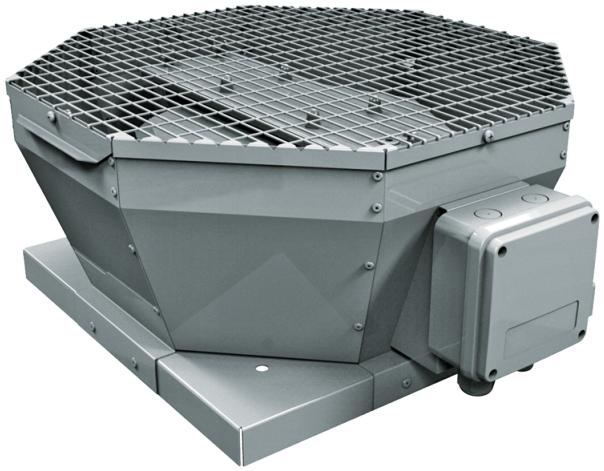

Tower-V 400 6E

Roof centrifugal fans with vertical air discharge

• Sound pressure level LpA at 3 m: 47
• Impeller type: Centrifugal impeller with backward curved blades
• Casing material: Coated steel

	Unit of measurement	Tower-V 400 6E
Phases	-	1
Minimum supply voltage	V	230
Maximum supply voltage	V	230
Power supply frequency	Hz	50/60
Rated power	W	184
Unit current	A	0.89
Maximum airflow	m^3/h	2740
Rotation speed at 50hz	-	945
Sound pressure level LpA at 3 m	dB(A)	47
Weight	kg	31
Transported air temperature (max)	°C	60
Transported air temperature (min)	°C	-30
Ingress protection rating	-	IPX4
Ingress protection rating of the drive	-	IP54
Impeller material	-	Aluminium
Size	mm	400

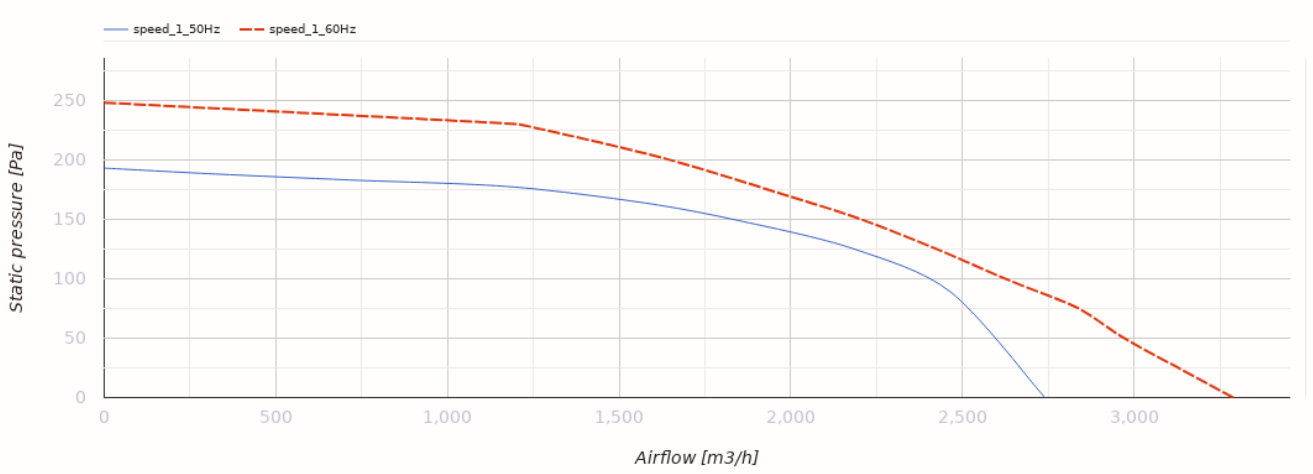

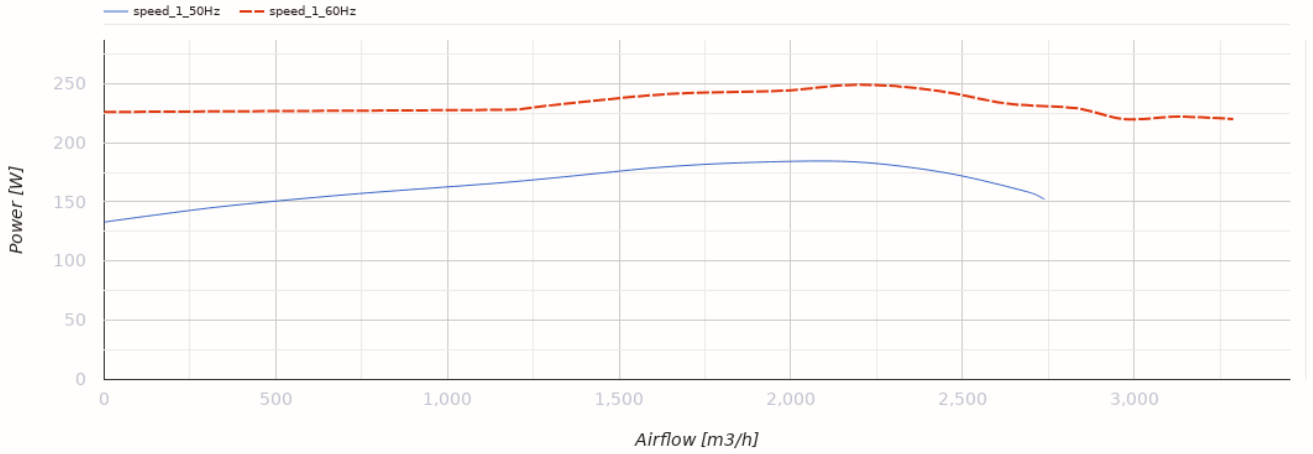

Dimensions

ØD	H	L	L1
438	375	738	598

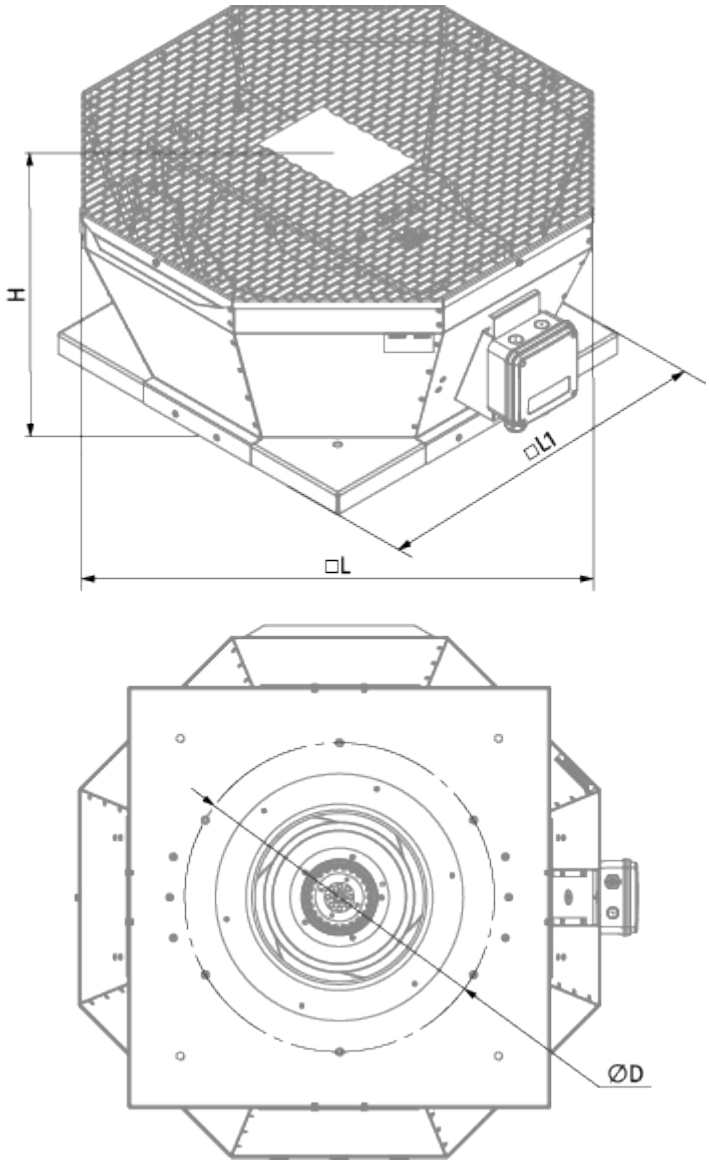

Accessories

Thyristor speed controllers

Name	Photo	Description
CDT E1.8		Thyristor speed controller