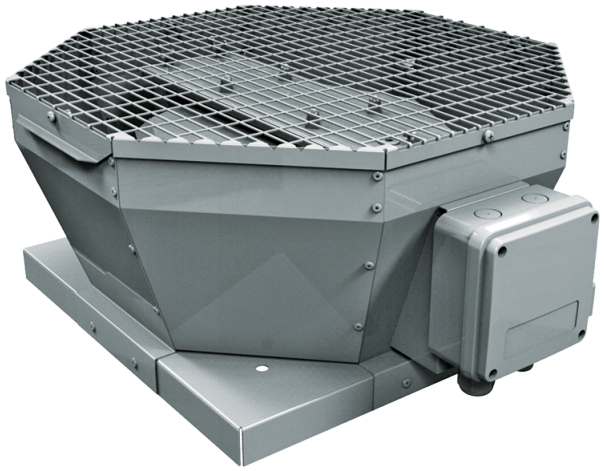

# Tower-V 355 4E

Roof centrifugal fans with vertical air discharge

- Sound pressure level LpA at 3 m: 51
- Impeller type: Centrifugal impeller with backward curved blades
- Casing material: Coated steel

| | Unit of measurement | Tower-V 355 4E |
|---|---|---|
| Phases | - | 1 |
| Minimum supply voltage | V | 230 |
| Maximum supply voltage | V | 230 |
| Power supply frequency | Hz | 50/60 |
| Rated power | W | 219 |
| Unit current | A | 0.96 |
| Maximum airflow | $m^3/h$ | 2480 |
| Rotation speed at 50hz | - | 1420 |
| Sound pressure level LpA at 3 m | dB(A) | 51 |
| Weight | kg | 26 |
| Transported air temperature (max) | °C | 50 |
| Transported air temperature (min) | °C | -25 |
| Ingress protection rating | - | IPX4 |
| Ingress protection rating of the drive | - | IP54 |
| Impeller material | - | Aluminium |
| Size | mm | 355 |

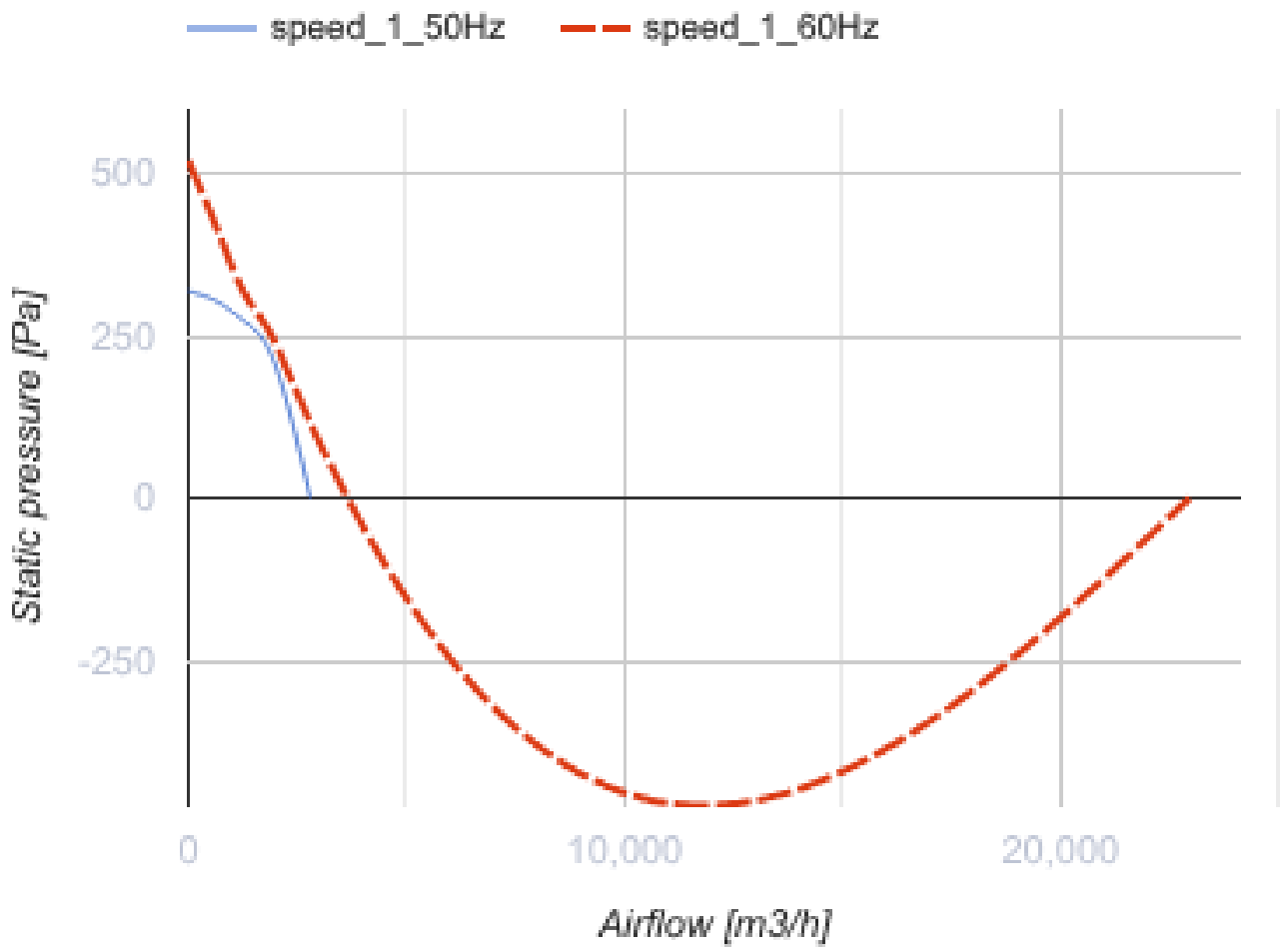
speed_1_50Hz
speed_1_60Hz
500
250
0
-250
Static pressure [Pa]
0
10,000
20,000
Airflow [m3/h]

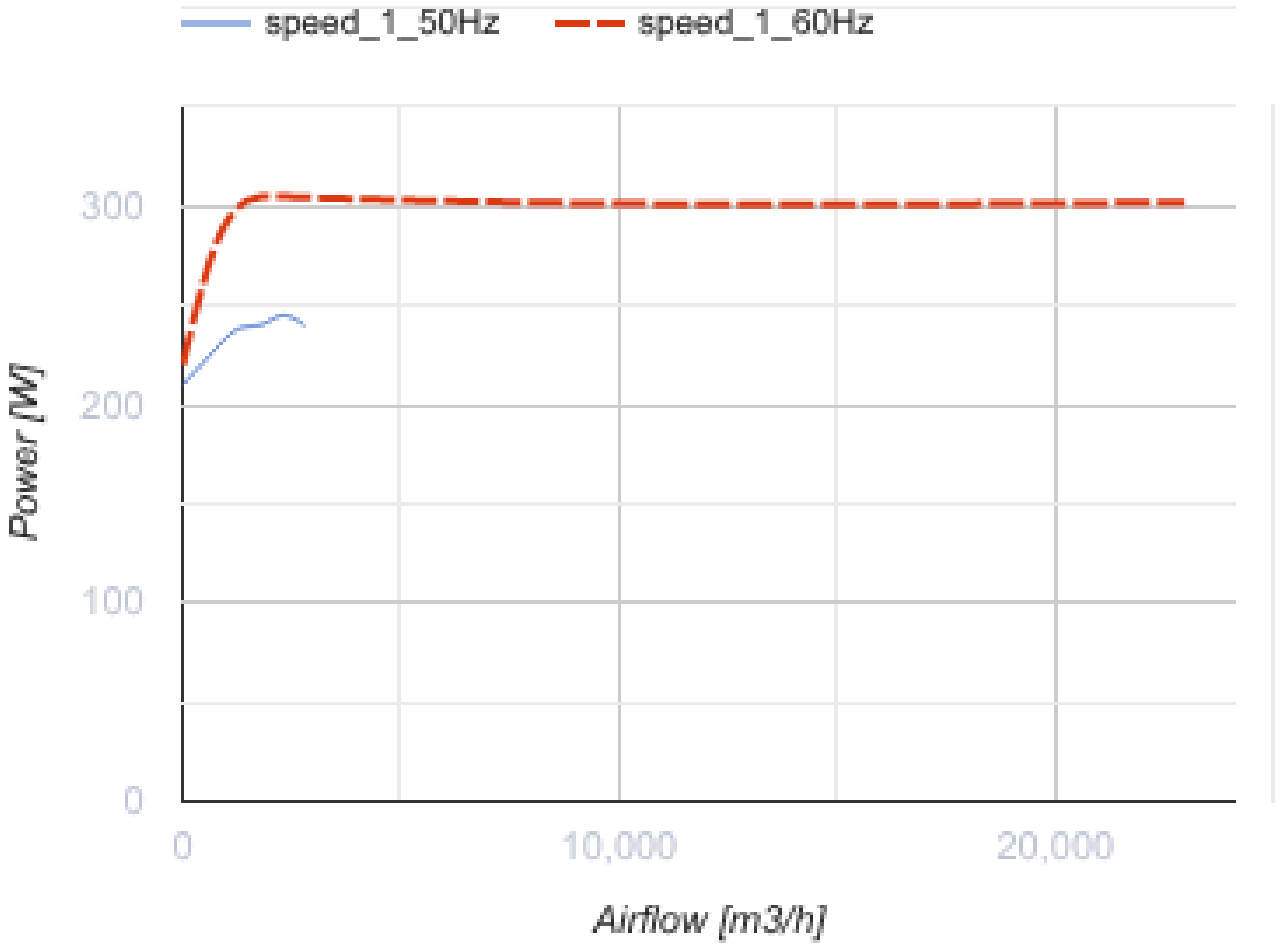


## Dimensions

| ØD | H | L | L1 |
|---|---|---|---|
| 438 | 300 | 738 | 598 |

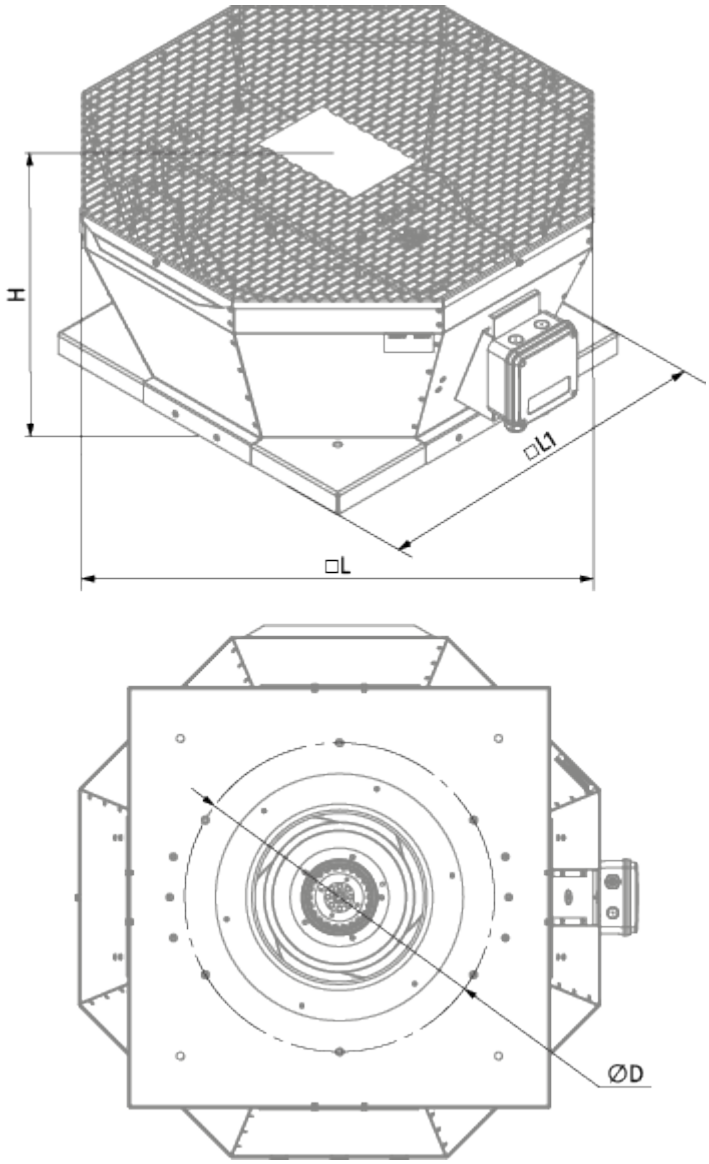
H
□L1
□L
ØD

## Ecodesign

| | |
|---|---|
| Trademark | Blauberg |
| Model | Tower-V 355 4E |
| Type of ventilation unit | Unidirectional |
| Type of drive installed | External MSD or VSD |
| Type of heat recovery system | None |
| Nominal external pressure (Pa) | 264 |
| Maximum external leakage rates (%) | 2.7 |
| Static efficiency (%) | 46 |
| Declared typology | NRVU UVU |
| Effective electric power input (kW) | 0.224 |
| Sound power level (dB(A)) | 66 |

## Accessories

### Thyristor speed controllers

| Name | Photo | Description |
|---|---|---|
| CDT E1.8 |  | Thyristor speed controller |