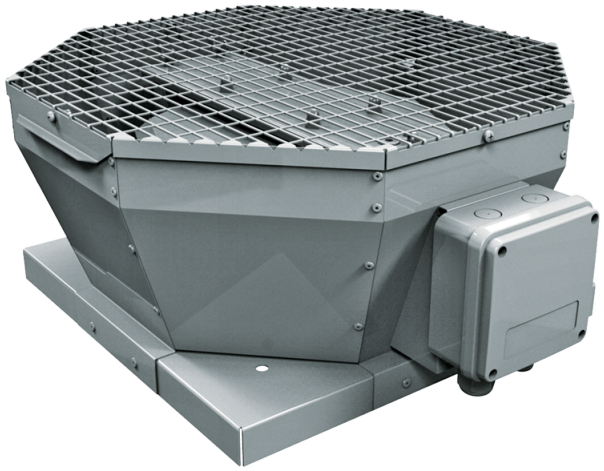

Tower-V 310 4D

Roof centrifugal fans with vertical air discharge

- Sound pressure level LpA at 3 m: 47
- Impeller type: Centrifugal impeller with backward curved blades
- Casing material: Coated steel

	Unit of measurement	Tower-V 310 4D
Phases	-	3
Minimum supply voltage	V	400
Maximum supply voltage	V	400
Power supply frequency	Hz	50/60
Rated power	W	155
Unit current	A	0.29
Maximum airflow	m³/h	2300
Rotation speed at 50hz	-	1410
Sound pressure level LpA at 3 m	dB(A)	47
Weight	kg	19
Transported air temperature (max)	°C	50
Transported air temperature (min)	°C	-25
Ingress protection rating	-	IPX4
Ingress protection rating of the drive	-	IP54
Impeller material	-	Aluminium
Size	mm	310

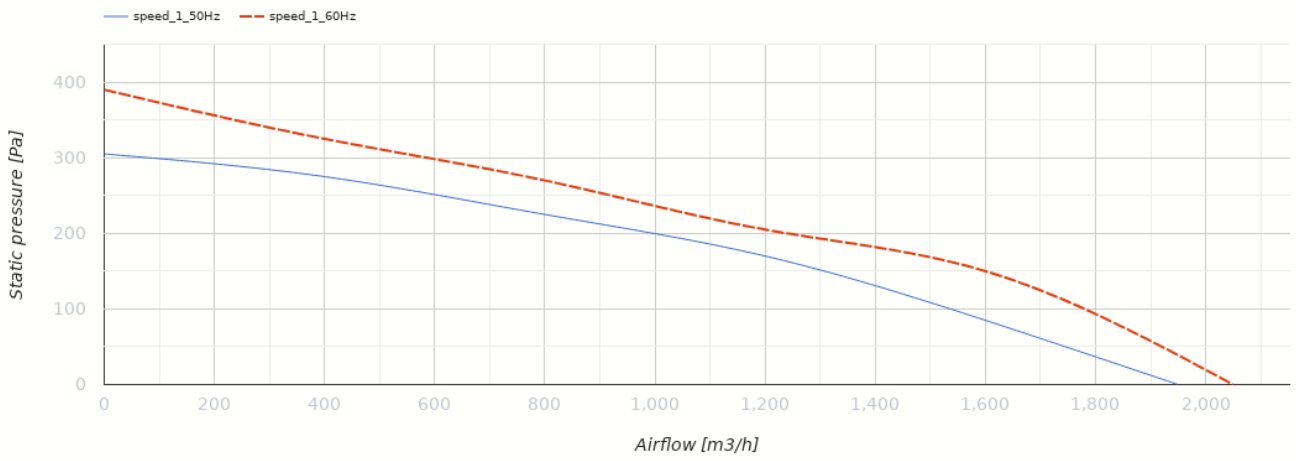

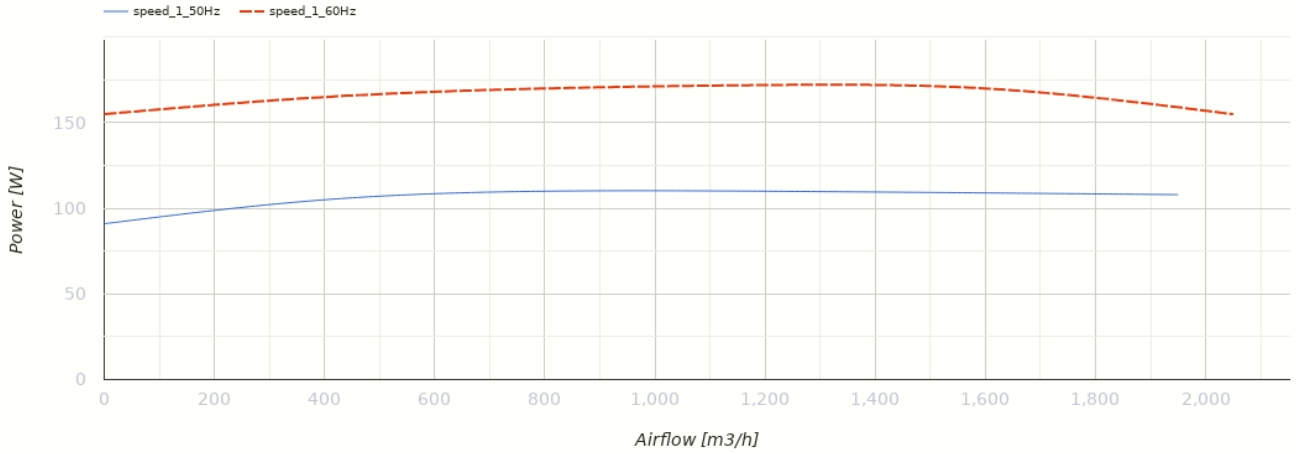

Dimensions

ØD	H	L	L1
285	300	613	477

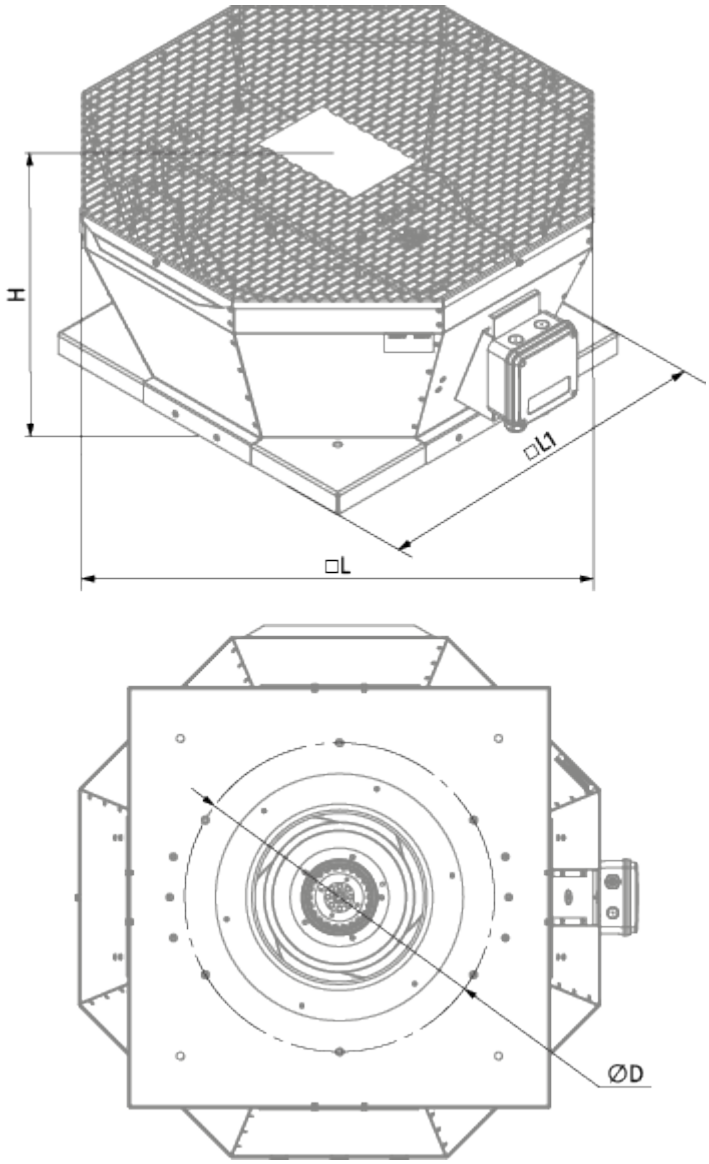
H
□L1
□L
ØD

Ecodesign

Trademark	Blauberg
Model	Tower-V 310 4D
Type of ventilation unit	Unidirectional
Type of drive installed	External MSD or VSD
Type of heat recovery system	None
Nominal external pressure (Pa)	212
Maximum external leakage rates (%)	2.7
Static efficiency (%)	61
Declared typology	NRVU UVU
Effective electric power input (kW)	0.09
Sound power level (dB(A))	73

Accessories

Thyristor speed controllers

Name	Photo	Description
CDT E1.8		Thyristor speed controller