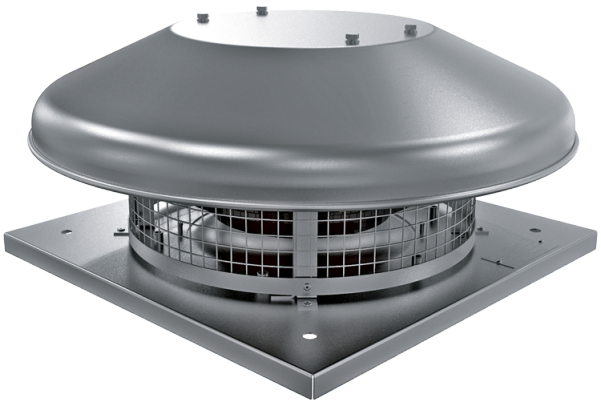

Tower-HC EC 310

Roof centrifugal fans with EC-motors

• Sound pressure level LpA at 3 m: 49
• Impeller type: Centrifugal impeller with backward curved blades
• Casing material: Coated steel

	Unit of measurement	Tower-HC EC 310
Phases	-	1
Maximum supply voltage	V	230
Minimum supply voltage	V	230
Power supply frequency	Hz	50/60
Rated power	W	408
Unit current	A	1.79
Maximum airflow	m³/h	2700
Rotation speed at 50hz	-	2600
Sound pressure level LpA at 3 m	dB(A)	49
Weight	kg	12
Transported air temperature (max)	°C	60
Transported air temperature (min)	°C	-25
Ingress protection rating	-	IPX4
Ingress protection rating of the drive	-	IP55
Size	mm	310

Dimensions

H	ØD	ØD1	L	L1
254	623	285	420	330

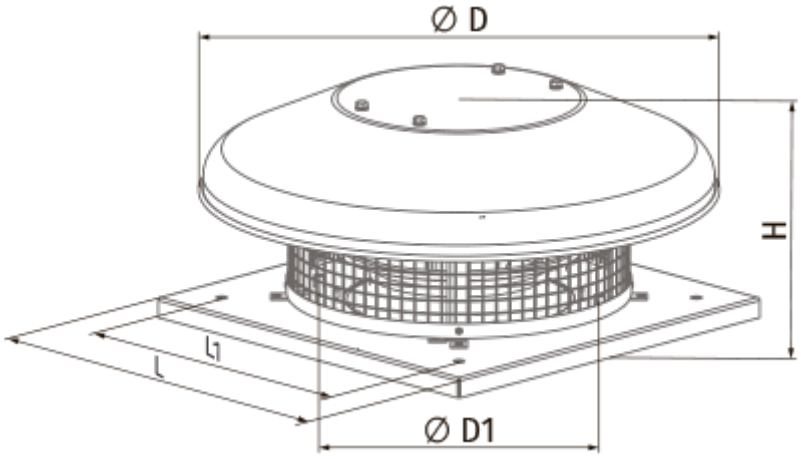

Ecodesign

Trademark	Blauberg
Model	Tower-HC EC 310
Type of drive installed	Integrated VSD
Type of heat recovery system	None
Nominal external pressure (Pa)	462
Maximum external leakage rates (%)	2.7
Static efficiency (%)	52
Sound power level (dB(A))	68
Declared typology	NRVU UVU
Effective electric power input (kW)	0.408

Accessories

EC motors regulators

Name	Photo	Description
CDT E/0-10		Speed control for EC motors