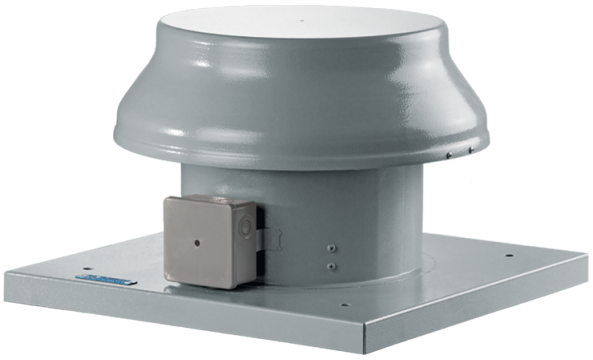

Tower-AL 250

Roof axial fans with aluminium impellers

- Sound pressure level LpA at 3 m: 48
- Impeller type: Axial
- Casing material: Coated steel

	Unit of measurement	Tower-AL 250
Connected air duct size	mm	250
Phases	-	1
Maximum supply voltage	V	240
Minimum supply voltage	V	220
Power supply frequency	Hz	50/60
Rated power	W	68
Unit current	A	0.48
Maximum airflow	m^3/h	1070
Rotation speed at 50hz	-	1300
Sound pressure level LpA at 3 m	dB(A)	48
Weight	kg	7.2
Transported air temperature (max)	°C	40
Ingress protection rating	-	IP24
Ingress protection rating of the drive	-	IP44
Impeller material	-	Aluminium
Size	mm	250

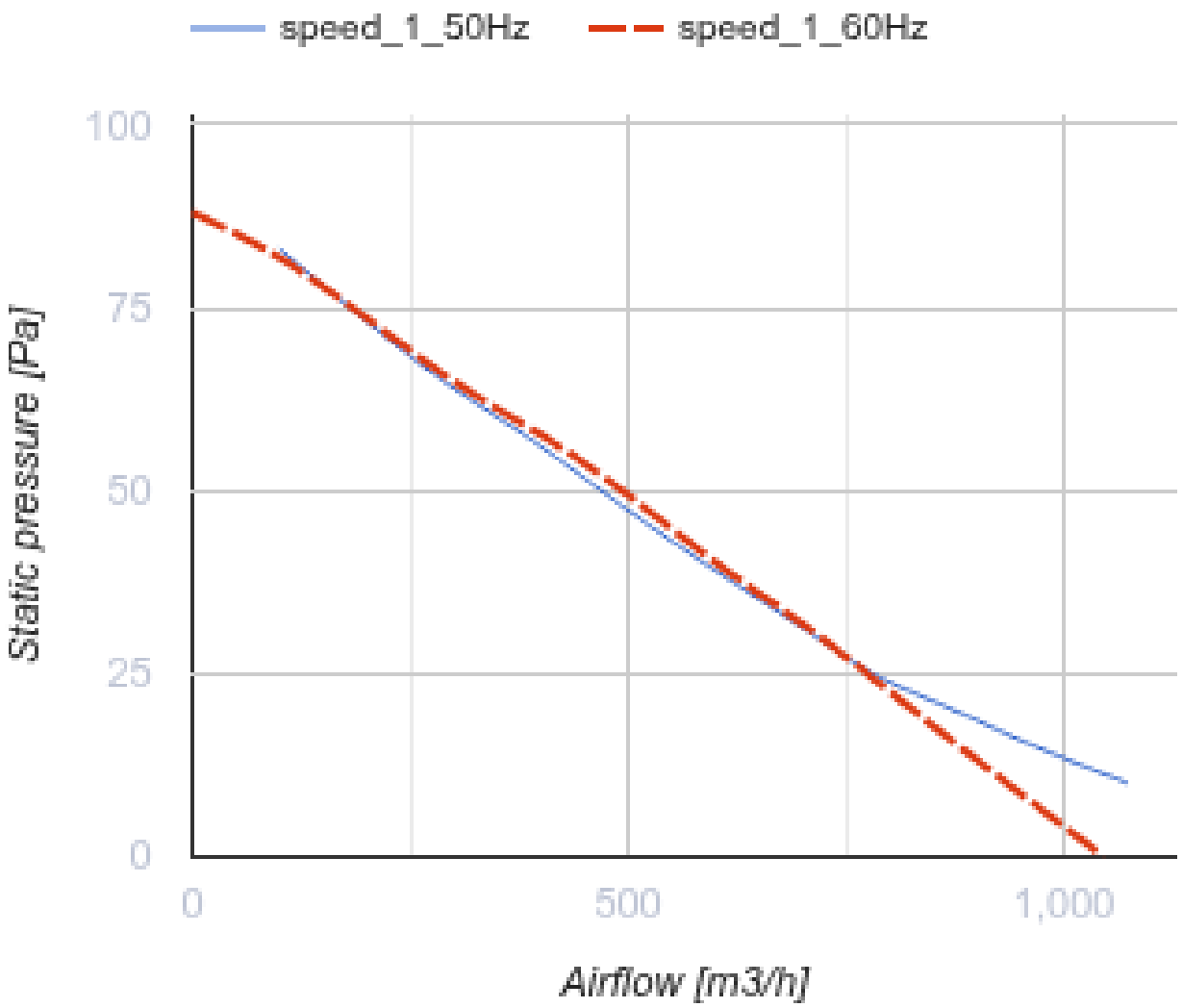
speed_1_50Hz
speed_1_60Hz
100
75
50
25
0
Static pressure [Pa]
0
500
1,000
Airflow [m3/h]

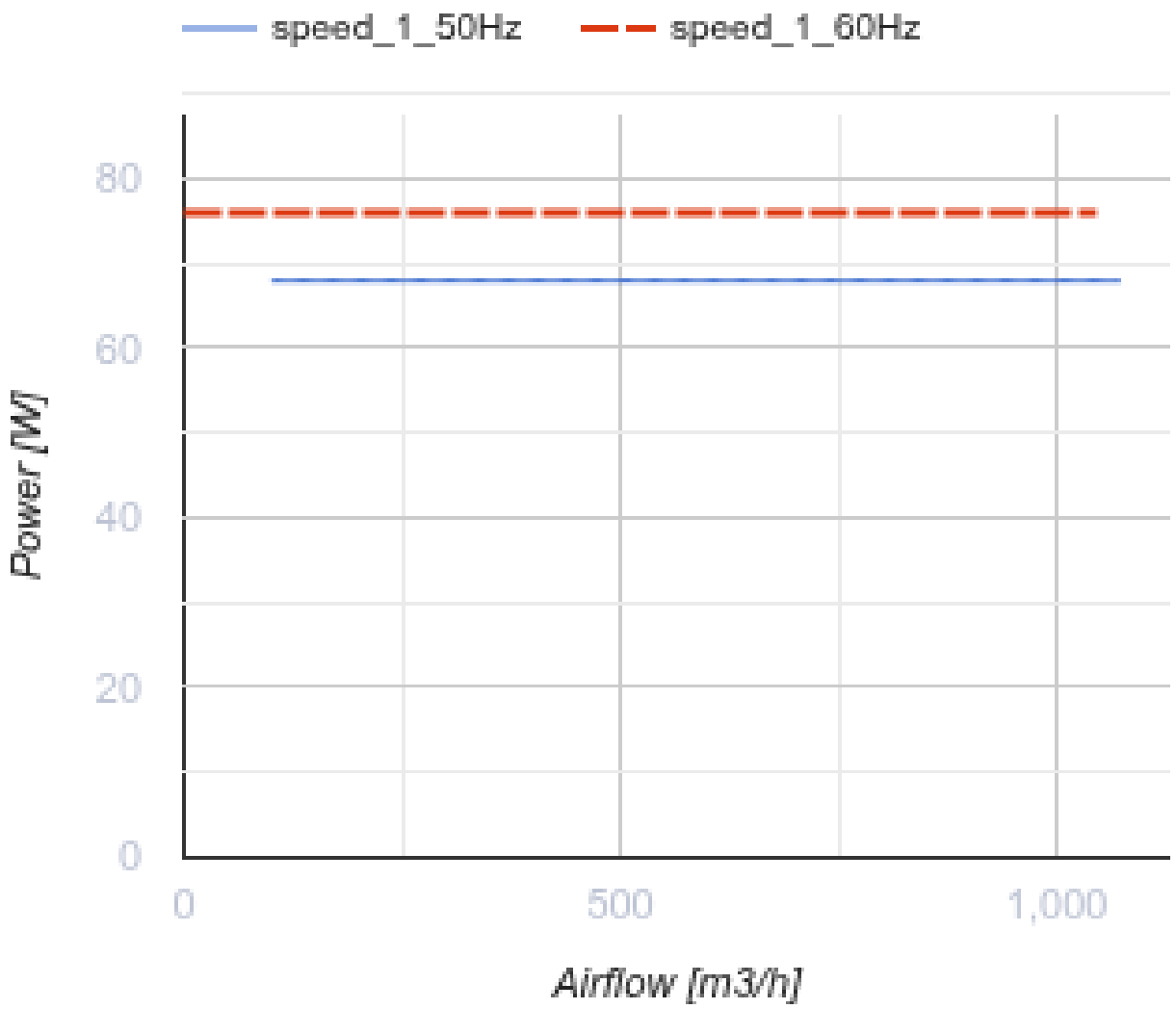

Dimensions

ØD	ØD1	H	L	L1
262	405	300	425	330

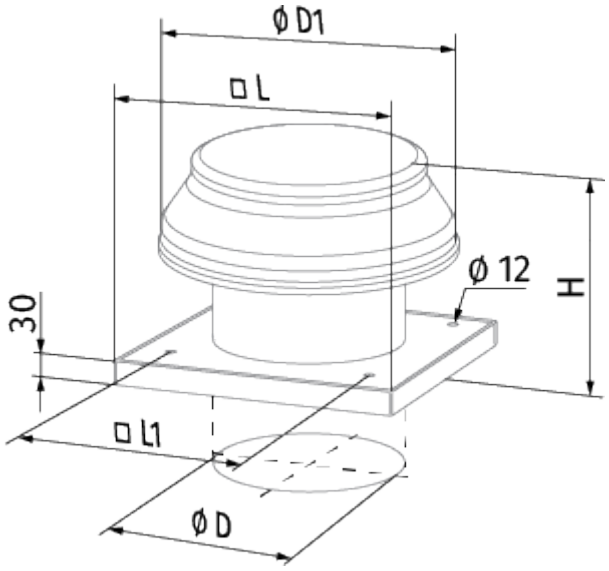
ØD1
□L
Ø 12
H
30
□L1
ØD

Ecodesign

Trademark	Blauberg
Model	Tower-AL 250
Type of ventilation unit	Unidirectional
Type of drive installed	External MSD or VSD
Type of heat recovery system	None
Nominal external pressure (Pa)	60
Maximum external leakage rates (%)	2.7
Static efficiency (%)	8
Sound power level (dB(A))	68
Effective electric power input (kW)	0.073
Declared typology	NRVU UVU

Accessories

Transformer speed controllers

Name	Photo	Description
CDR5E E3.5 TP		Single phase speed controller
CDR5E E5.0 TP		Single phase speed controller
CDR5E E7.5 TP		Single phase speed controller
CDR5E E1.5 TP		Single phase speed controller