

# Qubit-E 35/60 T

High-pressure extract centrifugal Qubit fans for air duct systems of high durability

- Sound pressure level LpA at 3 m: 21
- Impeller type: Centrifugal impeller with forward curved blades
- Casing material: Plastic
- Backdraft protection: Backdraft damper
- Timer: Internal timer, Turn on timer, Turn off timer

| | Unit of measurement | Qubit-E 35/60 T | |
|---|---|---|---|
| Speed | - | 1 | 2 |
| Maximum supply voltage | V | 240 | |
| Minimum supply voltage | V | 220 | |
| Power supply frequency | Hz | 50 | |
| Rated power | W | 11 | 20 |
| Unit current | A | 0.068 | 0.089 |
| Maximum airflow | $m^3/h$ | 35 | 60 |
| Sound pressure level LpA at 3 m | dB(A) | 15 | 21 |
| Ambient air temperature min | °C | 1 | |
| Ambient air temperature max | °C | 40 | |
| Ingress protection rating | - | IP45 | |
| Impeller material | - | Plastic | |

## Dimensions

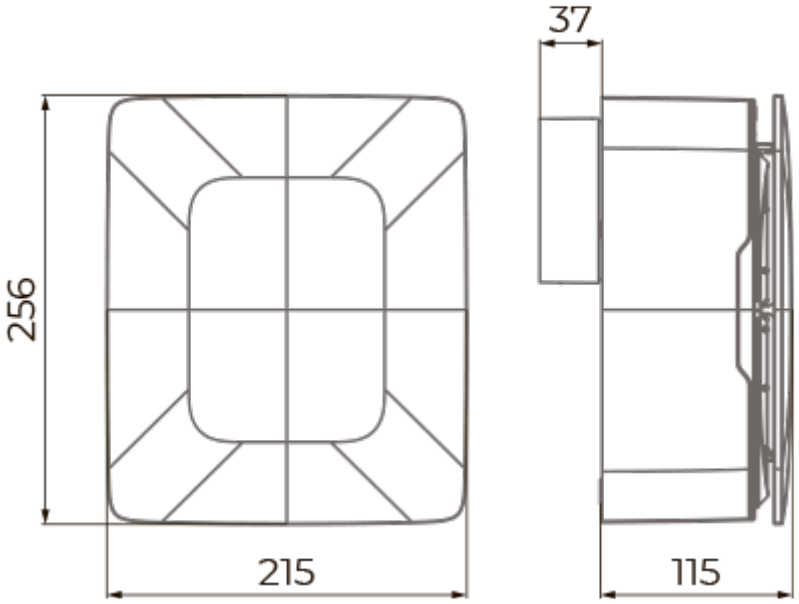
37
256
215
115

## Ecodesign

| Trademark | Blauberg | | | | | |
|---|---|---|---|---|---|---|
| Model | Qubit-E 35/60 T | | | | | |
| Specific energy consumption (SEC) (kWh/(m²/a)) | Cold | | Average | | Warm | |
| | 60 | G | 77.9 | G | 88.1 | G |
| Type of ventilation unit | Unidirectional | | | | | |
| Type of heat recovery system | None | | | | | |
| Maximum flow rate (m³/h) | 9 | | | | | |
| Electric power input (W) | 16.4 | | | | | |
| Reference flow rate (m³/s) | 0.001 | | | | | |
| Reference pressure difference (Pa) | 50 | | | | | |
| Specific power input (SPI) (W/(m³/h)) | 3.281 | | | | | |
| Control typology | Clock control | | | | | |
| Maximum external leakage rates (%) | 2.7 | | | | | |
| Sound power level (dB(A)) | 40 | | | | | |
| The annual electricity consumption (AEC) (kWh/a) | Cold | | Average | | Warm | |
| | 3865 | | 3865 | | 3865 | |
| The annual heating saved (AHS) (kWh/a) | Cold | | Average | | Warm | |
| | 3667 | | 1874 | | 848 | |

## Accessories

### Speed control switches

| Name | Photo | Description |
|---|---|---|
| CDP-2/5 |  | Multi-speed switch |

### Fittings

| Name | Photo | Description |
|---|---|---|
| K 100 |  | Clamp for round flexible ducts |

### Flexible ducts

| Name | Photo | Description |
| --- | --- | --- |
| BlauFlex AN 100/3 |  | Flexible air ducts BlauFlex |