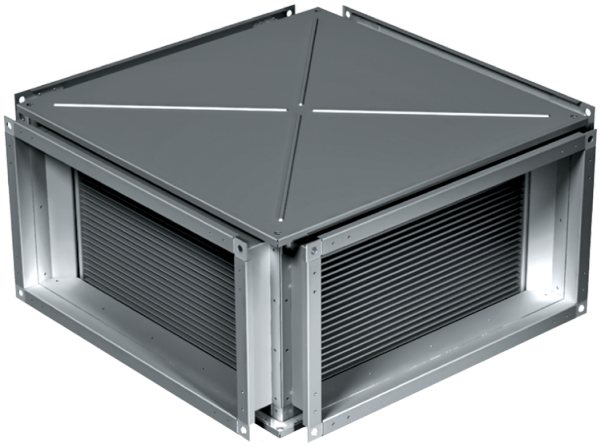

KWT 40x20

Plate heat exchangers for rectangular ducts

- Casing material: Galvanized steel

	Unit of measurement	KWT 40x20
Weight	kg	17.1

Dimensions

B	B1	B2	H	H1	H2	H3	L
400	420	440	200	220	240	275	530

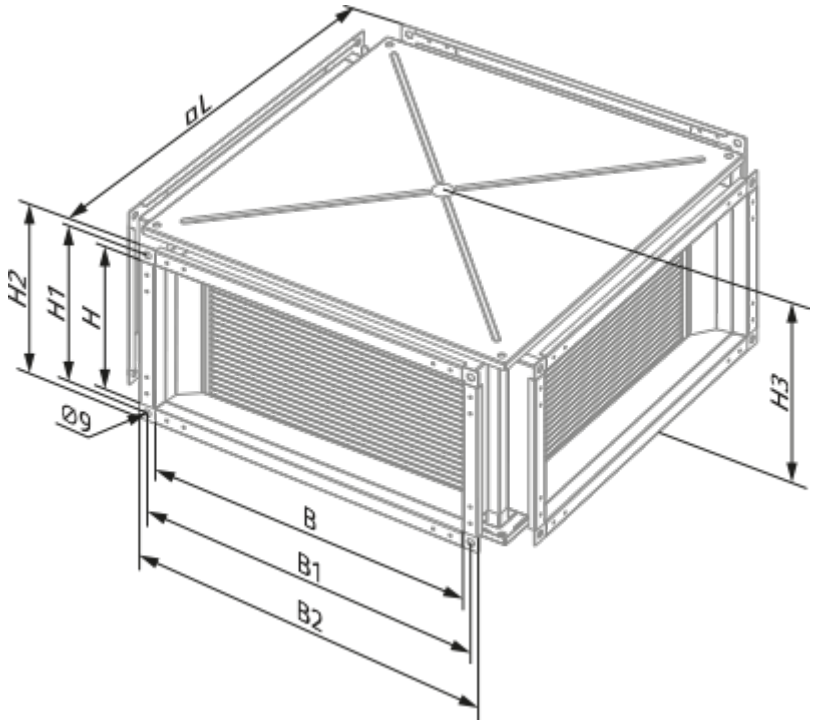
øL
H2
H1
H
Ø9
H3
B
B1
B2