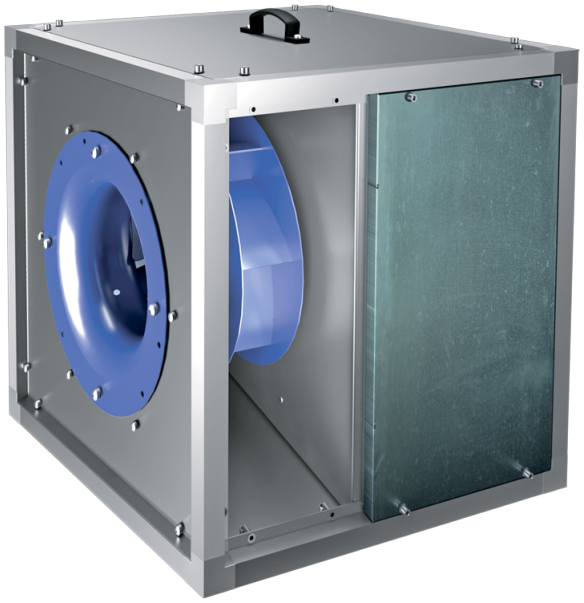

Iso-VK EC 355 E

Kitchen inline fans in sound-insulated casings with operational temperature of 120 °C with EC-motors

- Sound pressure level LpA at 3 m: 58
- Sound-insulated casing
- Impeller type: Centrifugal impeller with backward curved blades
- Casing material: Aluzinc
- Installation in any position

	Unit of measurement	Iso-VK EC 355 E
Phases	-	1
Minimum supply voltage	V	230
Maximum supply voltage	V	230
Power supply frequency	Hz	50/60
Rated power	W	550
Unit current	A	4.9
Maximum airflow	m³/h	3500
Rotation speed at 50hz	-	1500
Sound pressure level LpA at 3 m	dB(A)	58
Weight	kg	47.5
Transported air temperature (max)	°C	120
Transported air temperature (min)	°C	-25
Maximum transported air temperature	-	120°C CONTINUOUS
Ingress protection rating	-	IPX4
Impeller material	-	Steel
Size	mm	355

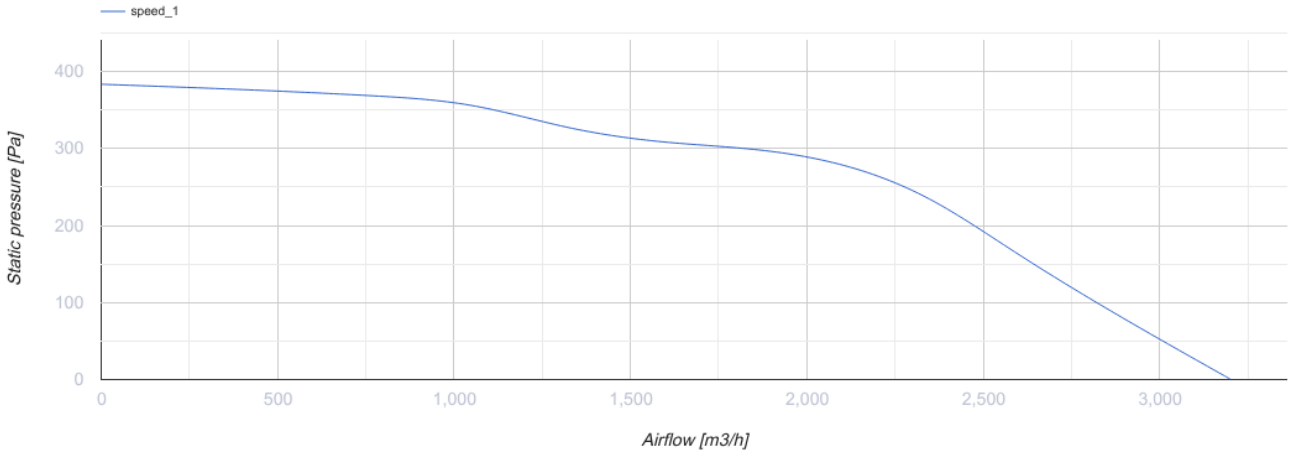

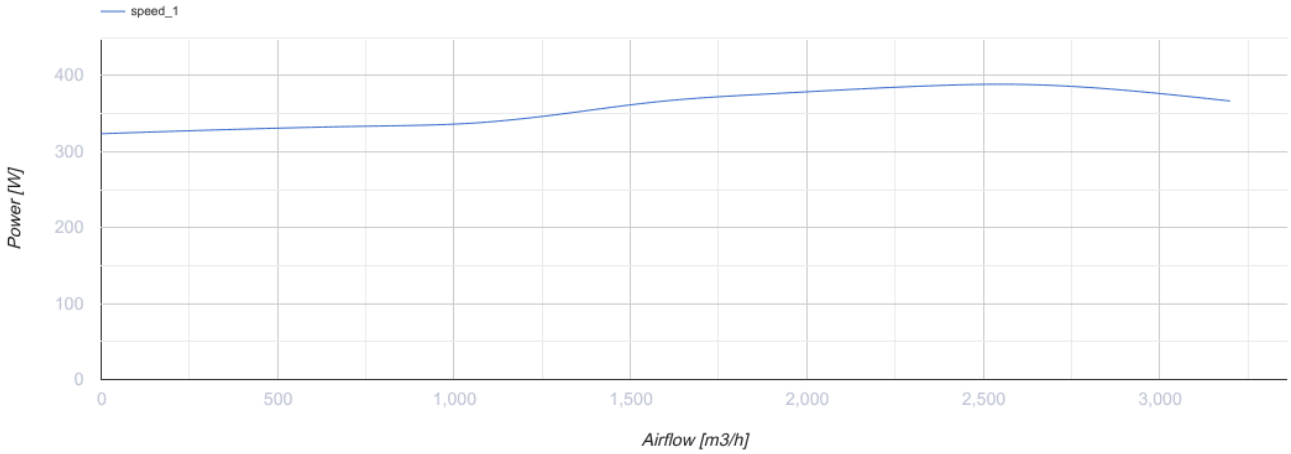

Dimensions

H	H1	H2	L	L1	W	W1	W2
600	638	540	600	638	600	638	225

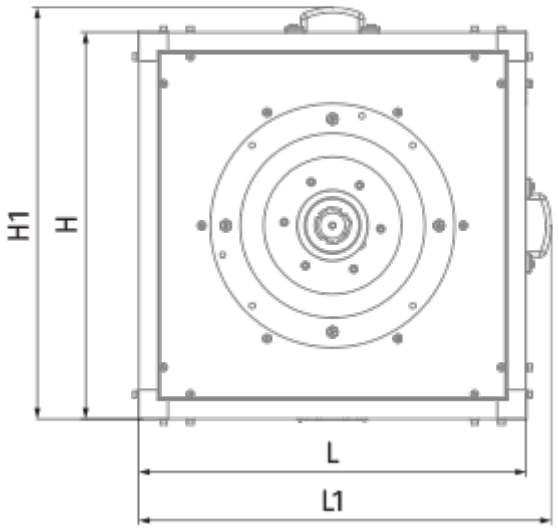
H1
H
L
L1

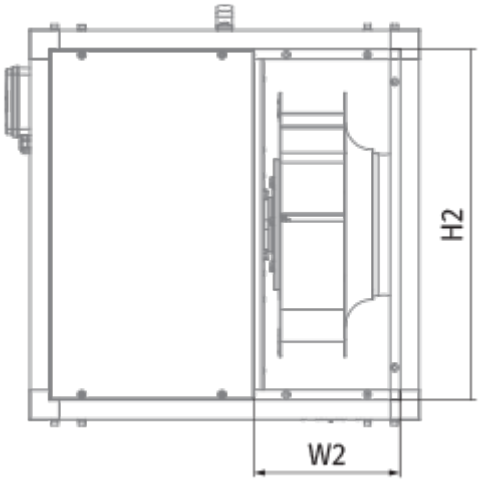
H2
W2

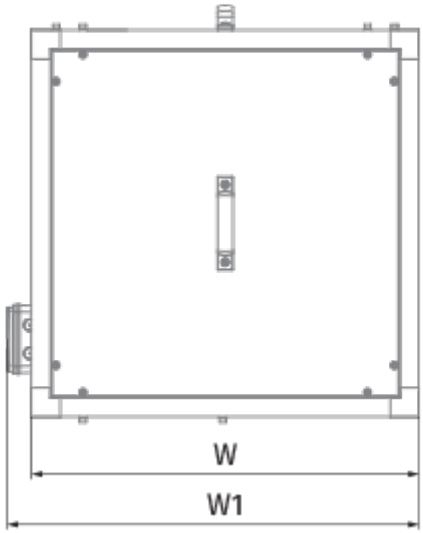
W
W1

Accessories

EC motors regulators

Name	Photo	Description
CDT E/0-10		Speed control for EC motors