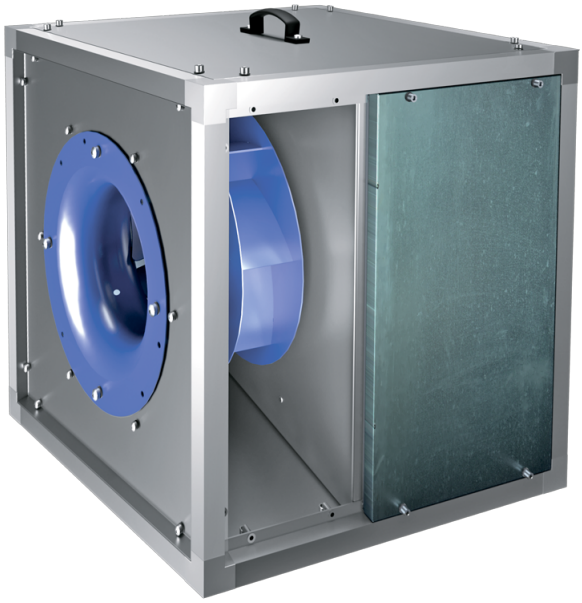

Iso-VK 500 4E

Kitchen inline fans in sound-insulated casings with operational temperature of 120 °C

- Sound pressure level LpA at 3 m: 57
- Sound-insulated casing
- Impeller type: Centrifugal impeller with backward curved blades
- Casing material: Aluzinc
- Installation in any position

	Unit of measurement	Iso-VK 500 4E
Connected air duct size	mm	500
Phases	-	1
Minimum supply voltage	V	230
Maximum supply voltage	V	230
Power supply frequency	Hz	50
Rated power	W	1500
Unit current	A	10.6
Maximum airflow	m^3/h	9100
Rotation speed at 50hz	-	1410
Sound pressure level LpA at 3 m	dB(A)	57
Weight	kg	96.3
Transported air temperature (max)	°C	120
Transported air temperature (min)	°C	-25
Maximum transported air temperature	-	120°C CONTINUOUS
Ingress protection rating	-	IPX4
Impeller material	-	Steel
Size	mm	500

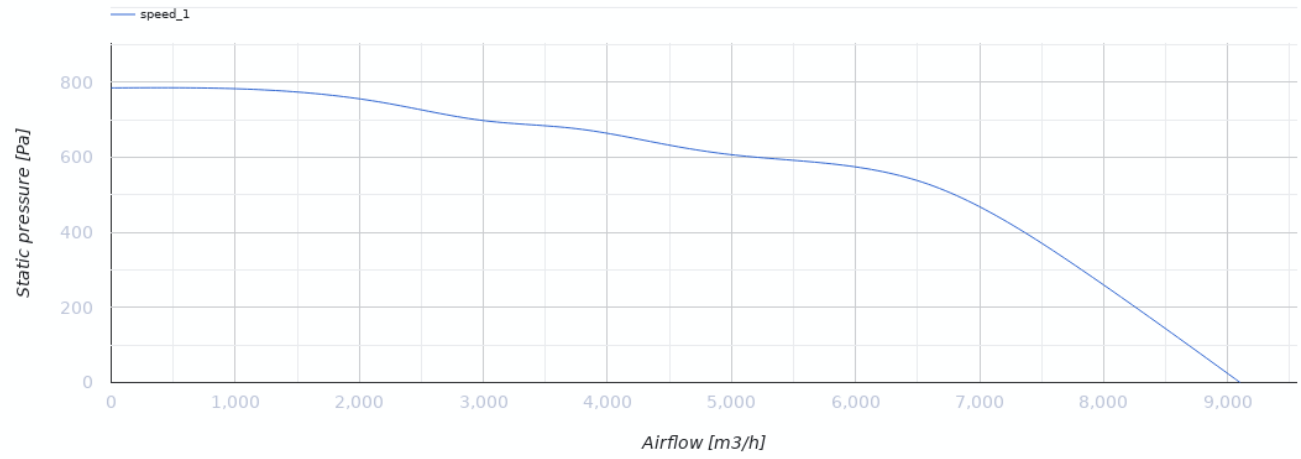

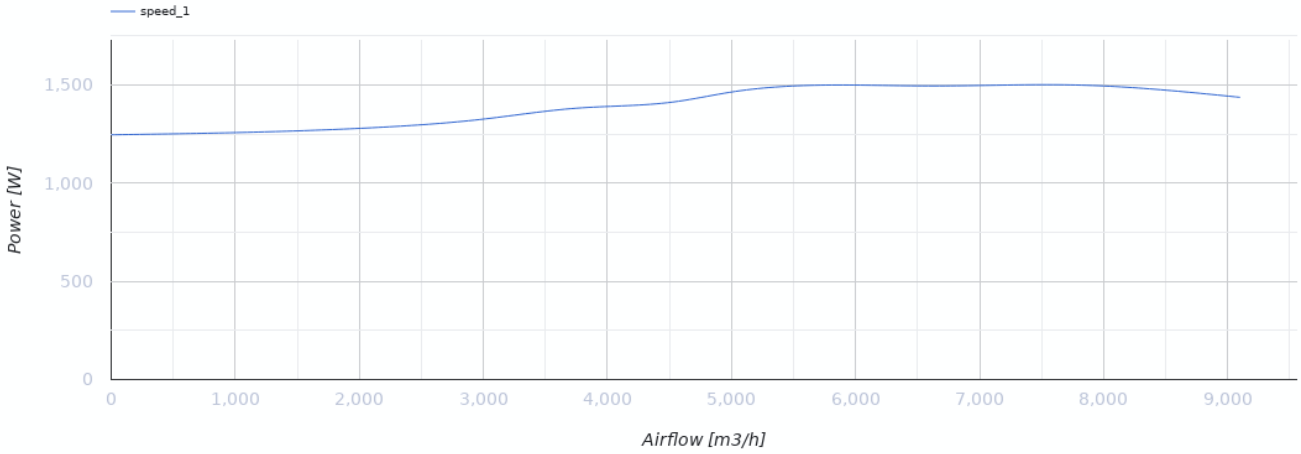

Dimensions

H	H1	H2	L	L1	W	W1	W2
820	858	760	820	858	820	858	321

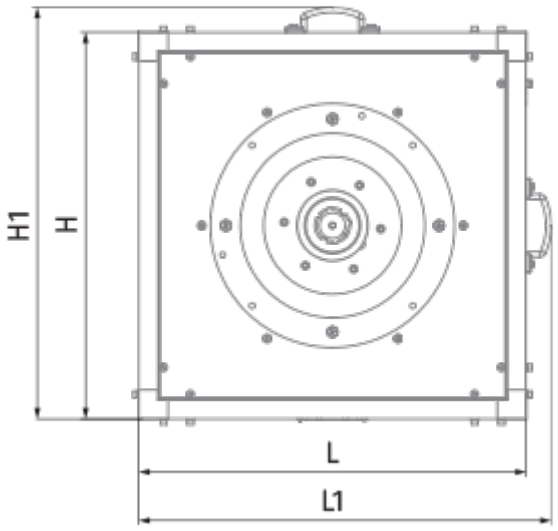
H1
H
L
L1

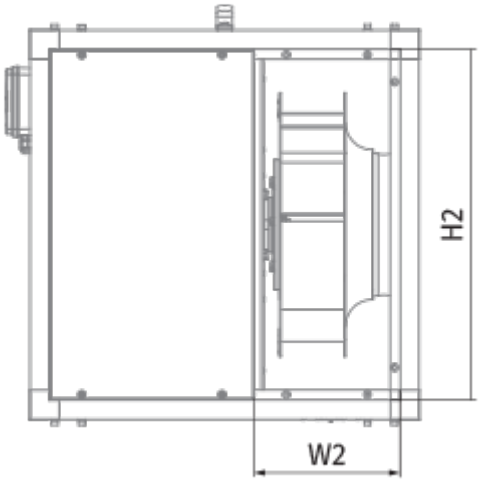
H2
W2

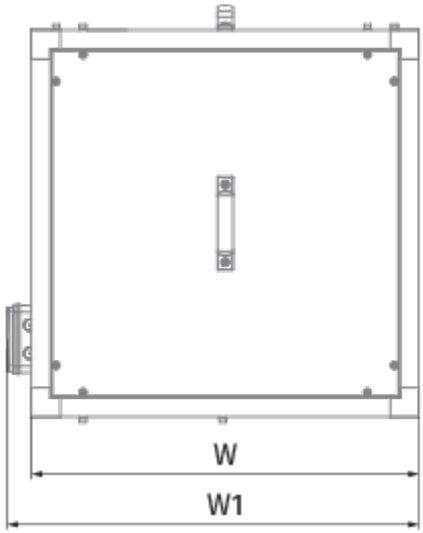
W
W1