

Iso-Primo EC 355 W

Mixed-flow inline fans in sound-insulated casings with EC-motors

- Sound pressure level LpA at 3 m: 48
- Sound-insulated casing
- Impeller type: Mixed-flow
- Casing material: Galvanized steel
- Installation in any position
- Cable with mains plug

	Unit of measurement	Iso-Primo EC 355 W
Connected air duct size	mm	355
Phases	-	1
Maximum supply voltage	V	230
Minimum supply voltage	V	230
Power supply frequency	Hz	50/60
Rated power	W	353
Unit current	A	1.56
Maximum airflow	m^3/h	3500
Rotation speed at 50hz	-	2470
Sound pressure level LpA at 3 m	dB(A)	48
Weight	kg	20.7
Transported air temperature (max)	°C	55
Transported air temperature (min)	°C	-25
Ambient air temperature min	°C	1
Ambient air temperature max	°C	40
Ingress protection rating	-	IPX4
Ingress protection rating of the drive	-	IP44
Impeller material	-	Plastic

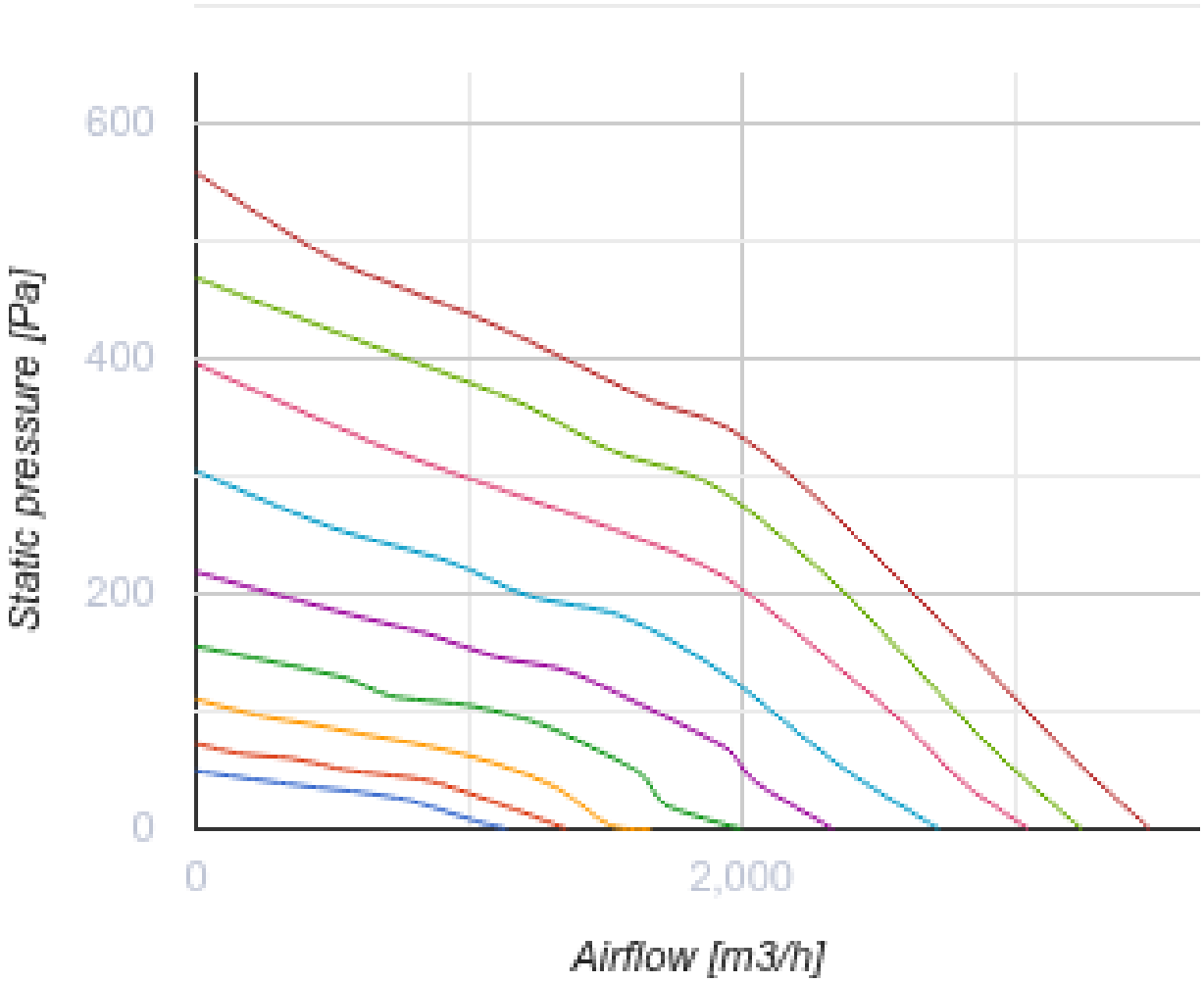
600
400
200
0
Static pressure [Pa]
0
2,000
Airflow [m3/h]

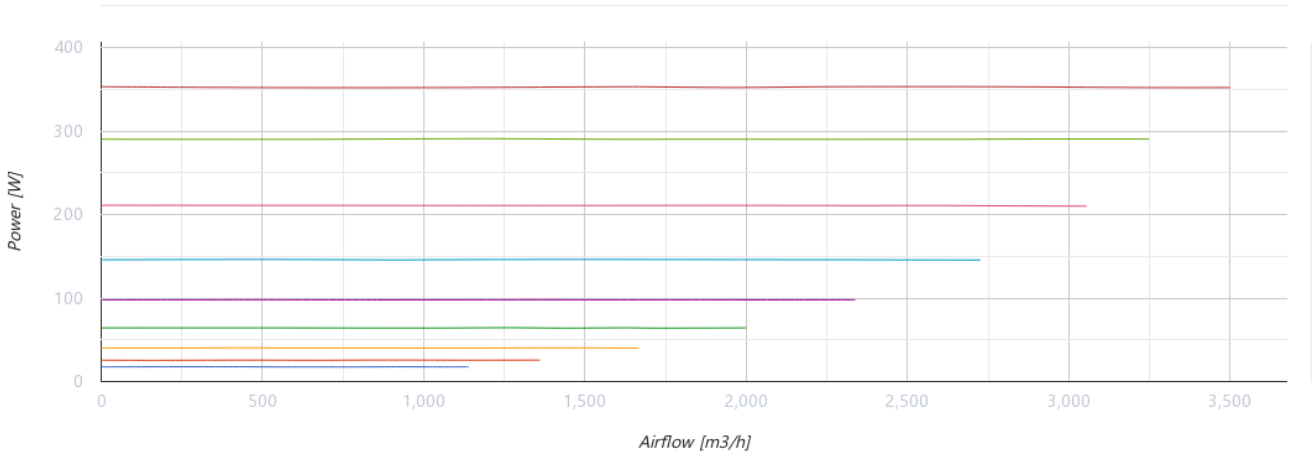
400
300
200
100
0
Power [W]
0
500
1,000
1,500
2,000
2,500
3,000
3,500
Airflow [m3/h]

Dimensions

Ø D	Ø D1	H	L	L1
354	412	471	601	739

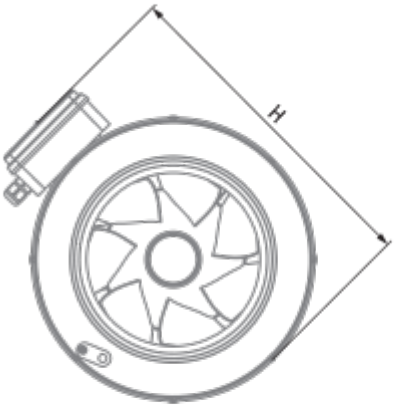

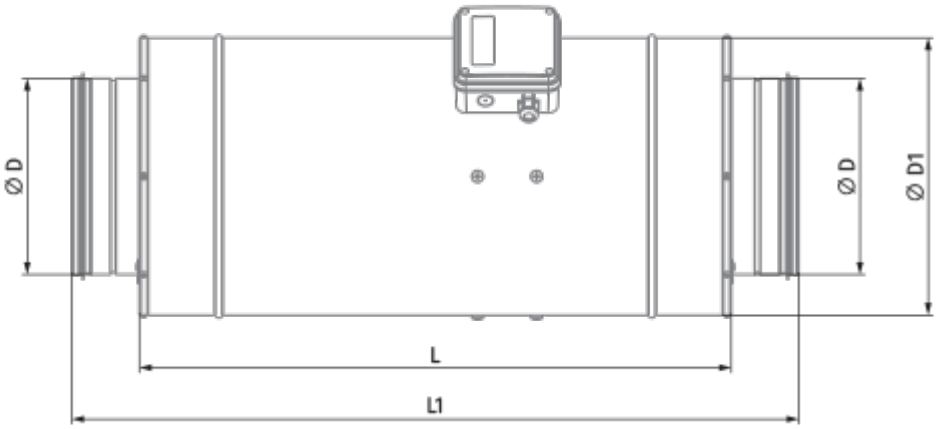

Accessories

For round ducts

Name	Photo	Description
SD 355/600		Silencers for round ducts
SD 355/900		Silencers for round ducts
SD 355/1200		Silencers for round ducts

For round ducts

Name	Photo	Description
VKA 355		Air dampers for round ducts

EC motors regulators

Name	Photo	Description

CDT E/0-10		Speed control for EC motors