

Iso-Primo EC 315

Mixed-flow inline fans in sound-insulated casings with EC-motors

- Sound pressure level LpA at 3 m: 47
- Sound-insulated casing
- Impeller type: Mixed-flow
- Casing material: Galvanized steel
- Installation in any position

	Unit of measurement	Iso-Primo EC 315
Connected air duct size	mm	315
Phases	-	1
Minimum supply voltage	V	230
Maximum supply voltage	V	230
Power supply frequency	Hz	50/60
Rated power	W	353
Unit current	A	1.56
Maximum airflow	m³/h	3090
Rotation speed at 50hz	-	2470
Sound pressure level LpA at 3 m	dB(A)	47
Weight	kg	20.7
Transported air temperature (max)	°C	55
Transported air temperature (min)	°C	-25
Ambient air temperature min	°C	1
Ambient air temperature max	°C	40
Ingress protection rating	-	IPX4
Ingress protection rating of the drive	-	IP44
Impeller material	-	Plastic

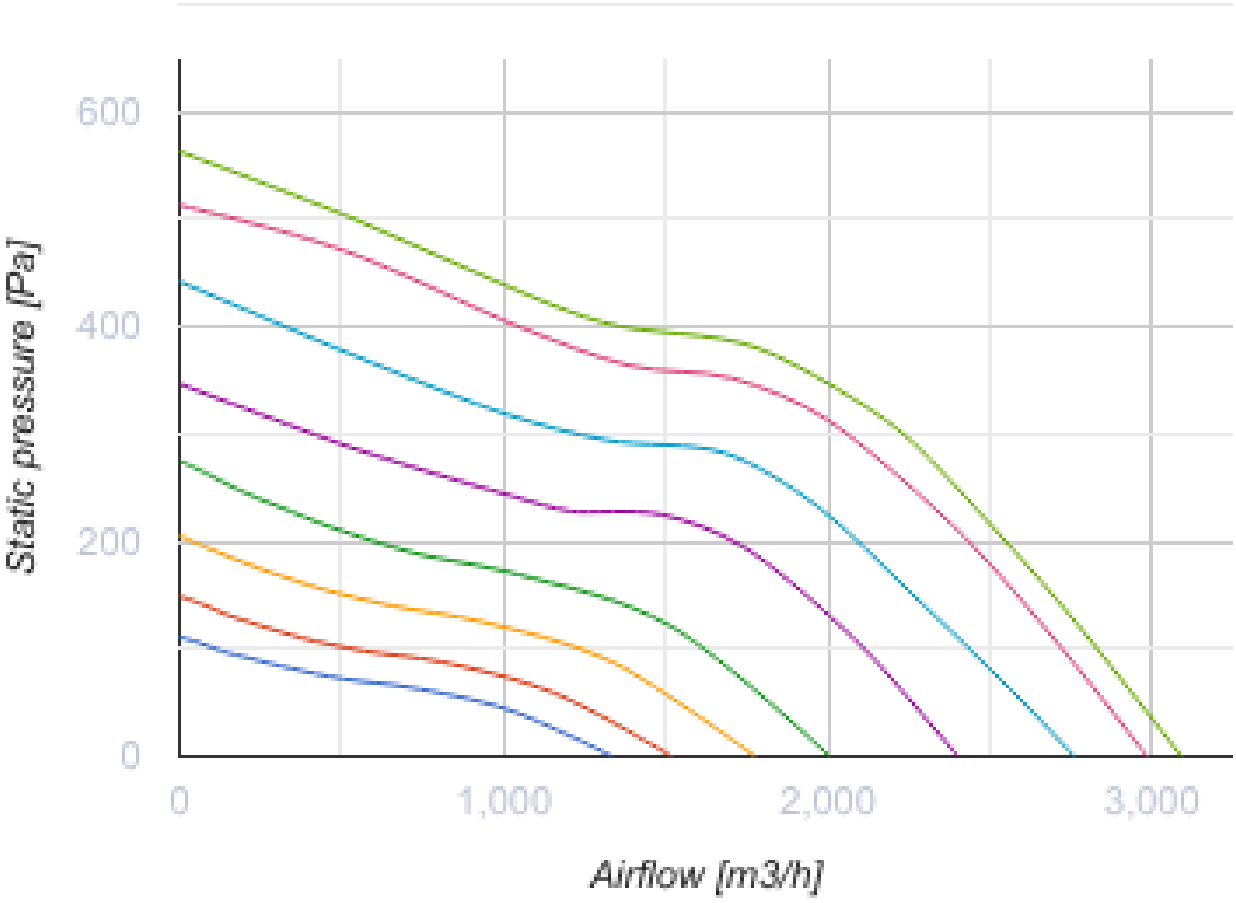
600
400
200
0
Static pressure [Pa]
0
1,000
2,000
3,000
Airflow [m3/h]

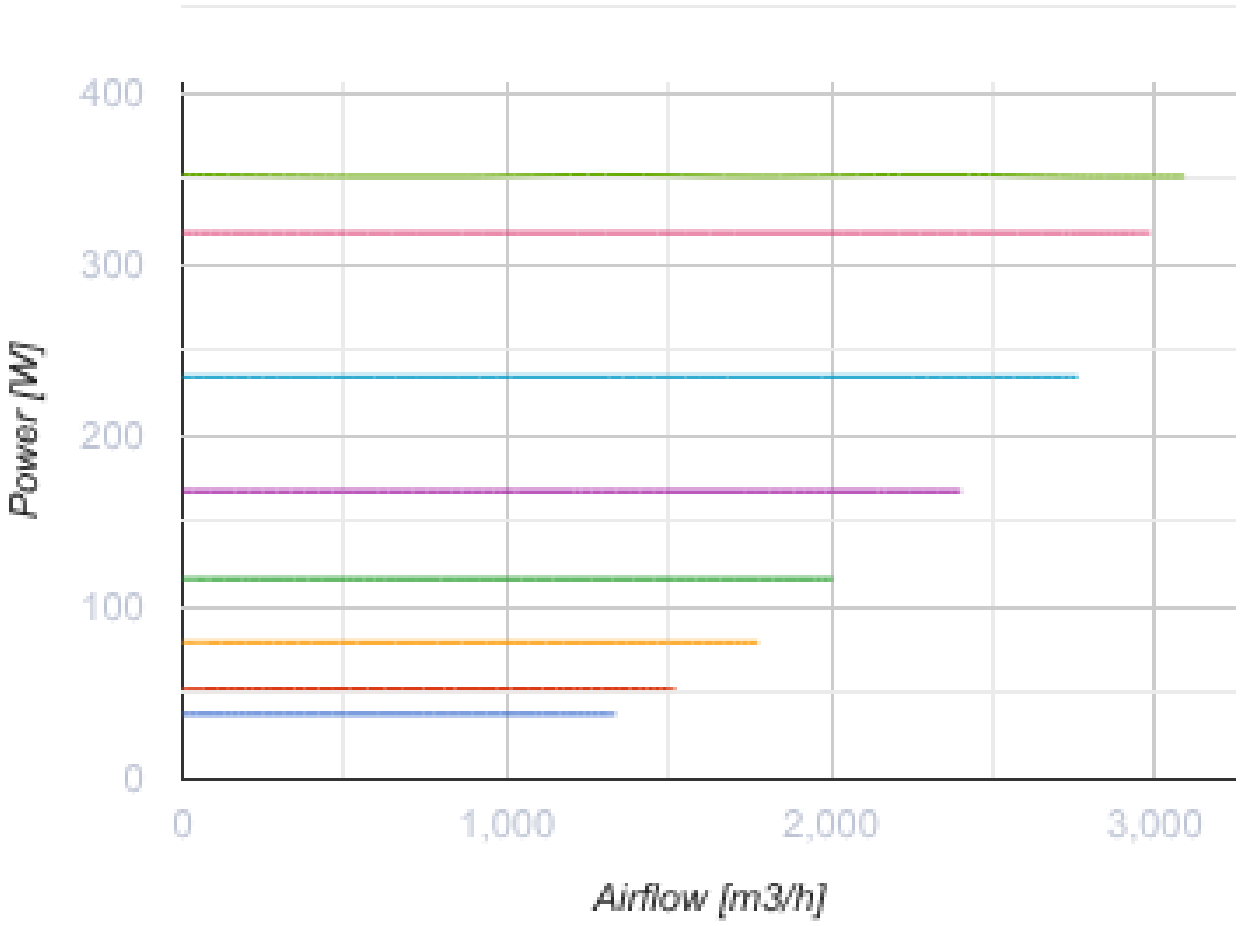

Dimensions

Ø D	Ø D1	H	L	L1
314	412	468	601	739

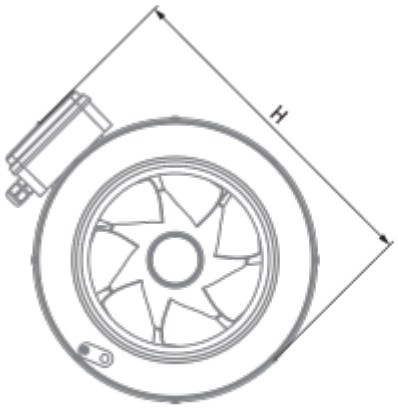
H

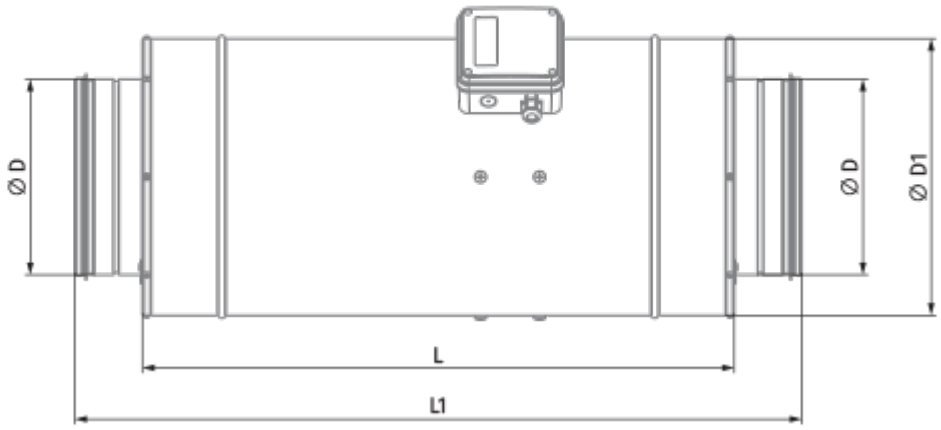
Ø D
Ø D
Ø D1
L
L1

Ecodesign

Trademark	Blauberg
Model	Iso-Primo EC 315
Type of ventilation unit	Unidirectional
Type of drive installed	Integrated VSD
Type of heat recovery system	None
Nominal external pressure (Pa)	380
Maximum external leakage rates (%)	2.7
Static efficiency (%)	54.6
Declared typology	NRVU UVU
Effective electric power input (kW)	0.352
Sound power level (dB(A))	67

Accessories

For round ducts

Name	Photo	Description
SD 315/600		Silencers for round ducts
SD 315/900		Silencers for round ducts
SD 315/1200		Silencers for round ducts

For round ducts

Name	Photo	Description
KFBK 315		Filter boxes for round ducts
KFBT 315 G4		Filter boxes with pocket filters for round ducts

KFBT 315 F5		Filter boxes with pocket filters for round ducts
KFBT 315 F7		Filter boxes with pocket filters for round ducts

For round ducts

Name	Photo	Description
VRV 315		Backdraft dampers with spring for round ducts
VKA 315		Air dampers for round ducts

Water heaters

Name	Photo	Description
WKH 315-2		Duct water heaters for round ducts
WKH 315-4		Duct water heaters for round ducts

Electrical heaters

Name	Photo	Description
EKH 315-1.2		Duct electrical heaters for round ducts
EKH 315-2.0		Duct electrical heaters for round ducts
EKH 315-2.4		Duct electrical heaters for round ducts
EKH 315-3.6		Duct electrical heaters for round ducts
EKH 315-6.0		Duct electrical heaters for round ducts

EKH 315-9.0		Duct electrical heaters for round ducts

EC motors regulators

Name	Photo	Description
CDT E/0-10		Speed control for EC motors