

Iso-Primo EC 200 W

Mixed-flow inline fans in sound-insulated casings with EC-motors

- Sound pressure level LpA at 3 m: 47
- Sound-insulated casing
- Impeller type: Mixed-flow
- Casing material: Galvanized steel
- Installation in any position
- Cable with mains plug

	Unit of measurement	Iso-Primo EC 200 W
Connected air duct size	mm	200
Phases	-	1
Minimum supply voltage	V	230
Maximum supply voltage	V	230
Power supply frequency	Hz	50/60
Rated power	W	121
Unit current	A	0.96
Maximum airflow	m^3/h	1210
Rotation speed at 50hz	-	3100
Sound pressure level LpA at 3 m	dB(A)	47
Weight	kg	8.2
Transported air temperature (max)	°C	55
Transported air temperature (min)	°C	-25
Ambient air temperature max	°C	40
Ambient air temperature min	°C	1
Ingress protection rating	-	IPX4
Ingress protection rating of the drive	-	IP44
Impeller material	-	Plastic

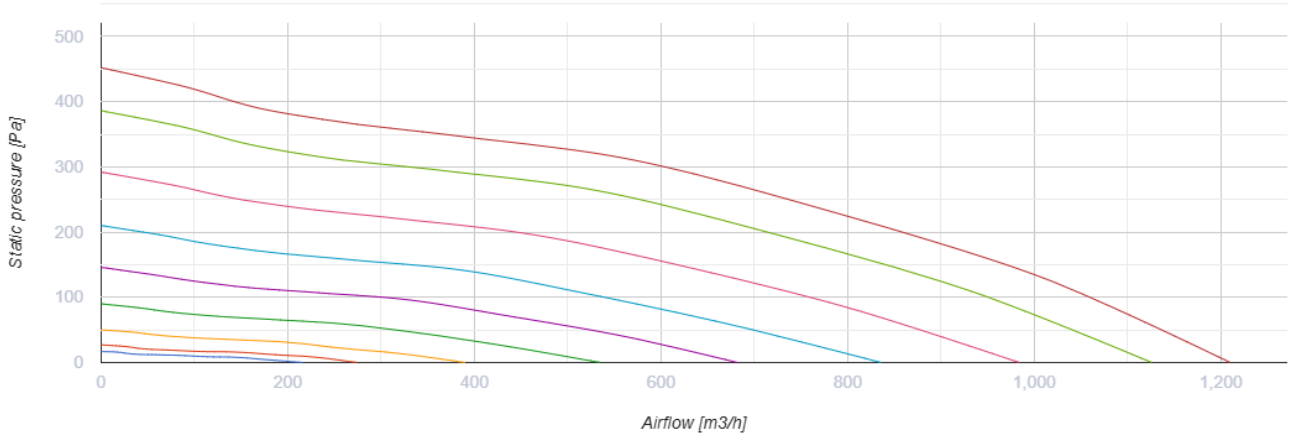

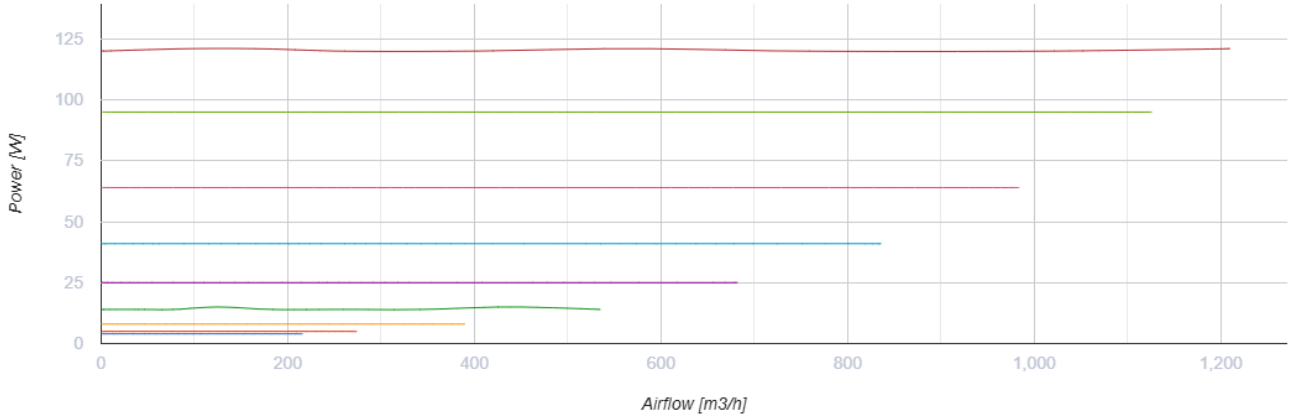

Dimensions

Ø D	Ø D1	H	L	L1
199	281	339	601	739

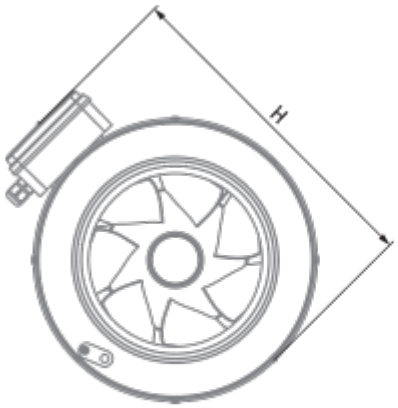

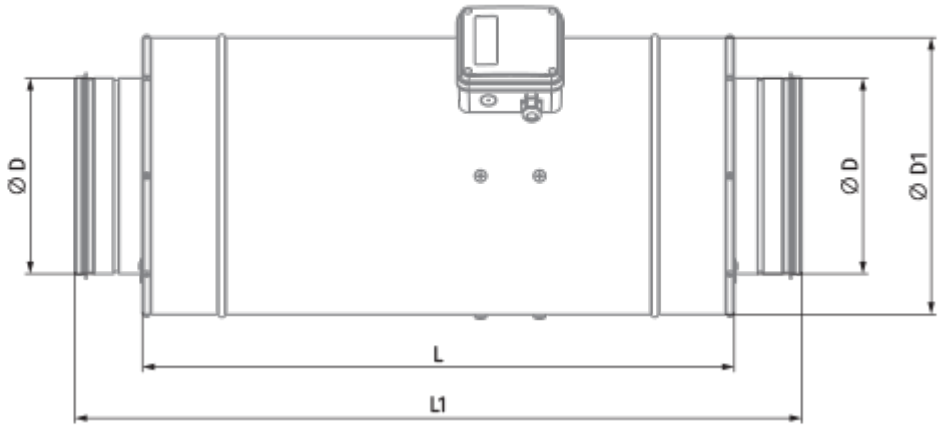

Ecodesign

Trademark	Blauberg
Model	Iso-Primo EC 200 W

Accessories

For round ducts

Name	Photo	Description
SD 200/600		Silencers for round ducts
SD 200/900		Silencers for round ducts
SD 200/1200		Silencers for round ducts

For round ducts

Name	Photo	Description
KFBK 200		Filter boxes for round ducts
KFBT 200 G4		Filter boxes with pocket filters for round ducts
KFBT 200 F5		Filter boxes with pocket filters for round ducts
KFBT 200 F7		Filter boxes with pocket filters for round ducts

For round ducts

Name	Photo	Description

VRV 200		Backdraft dampers with spring for round ducts
VKA 200		Air dampers for round ducts

Water heaters

Name	Photo	Description
WKH 200-2		Duct water heaters for round ducts
WKH 200-4		Duct water heaters for round ducts

Electrical heaters

Name	Photo	Description
EKH 200-1.2		Duct electrical heaters for round ducts
EKH 200-1.7		Duct electrical heaters for round ducts
EKH 200-2.0		Duct electrical heaters for round ducts
EKH 200-2.4		Duct electrical heaters for round ducts
EKH 200-3.4		Duct electrical heaters for round ducts
EKH 200-3.6		Duct electrical heaters for round ducts
EKH 200-5.1		Duct electrical heaters for round ducts
EKH 200-6.0		Duct electrical heaters for round ducts

EC motors regulators

Name	Photo	Description
CDT E/0-10		Speed control for EC motors