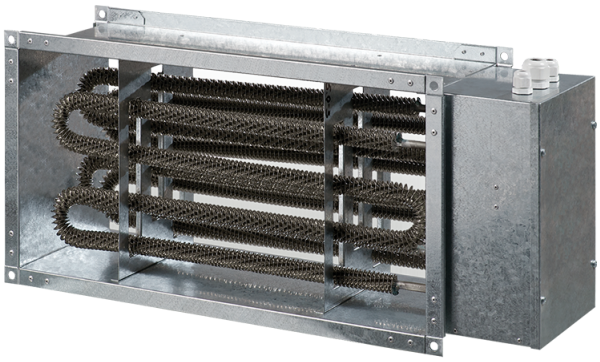

EKH 70x40-18

Duct electrical heaters for rectangular ducts

- Casing material: Galvanized steel

	Unit of measurement	EKH 70x40-18
Phases	-	3
Minimum supply voltage	V	400
Maximum supply voltage	V	400
Power supply frequency	Hz	50
Rated power	W	18000
Weight	kg	14

Dimensions

B	B1	B2	H	H1	H2	L
700	720	840	400	420	440	390

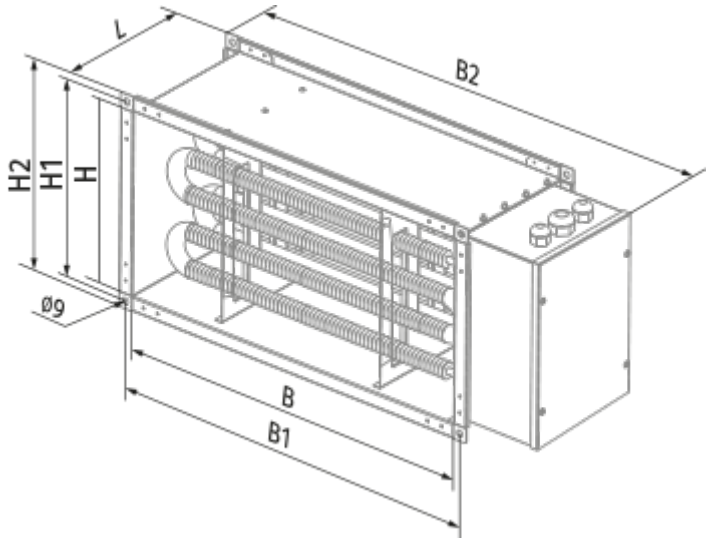
L
B2
H2
H1
H
Ø9
B
B1