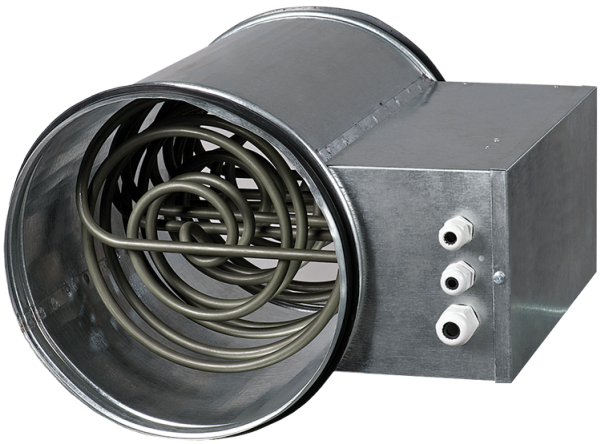

# EKH 150-6.0

Duct electrical heaters for round ducts

- Casing material: Galvanized steel

| | Unit of measurement | EKH 150-6.0 |
|---|---|---|
| Connected air duct size | mm | 150 |
| Phases | - | 3 |
| Minimum supply voltage | V | 400 |
| Maximum supply voltage | V | 400 |
| Power supply frequency | Hz | 50 |
| Rated power | W | 6000 |
| Weight | kg | 2.8 |

## Dimensions

| ØD | B | H | L | L1 |
|---|---|---|---|---|
| 149 | 120 | 255 | 376 | 296 |

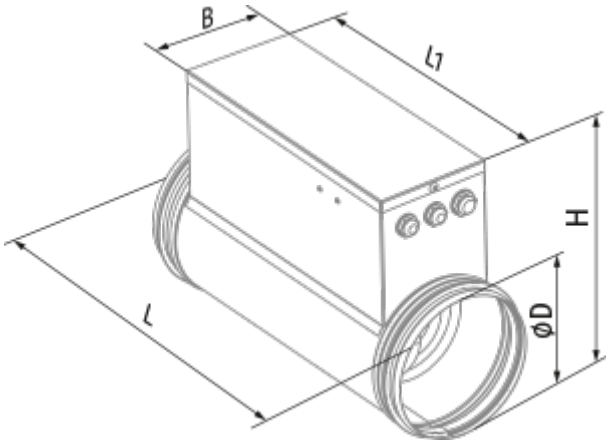
B
L1
H
ØD
L