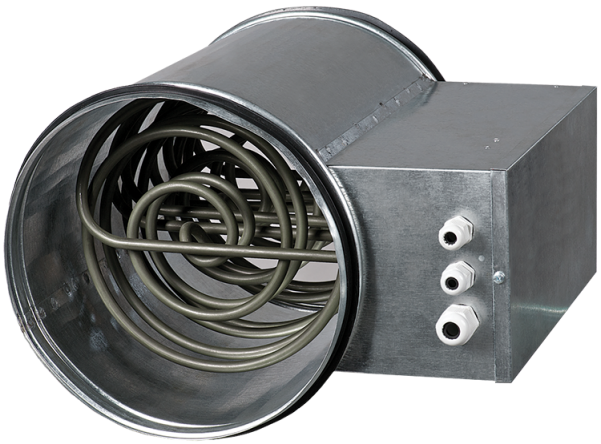

EKH 150-3.6

Duct electrical heaters for round ducts

- Casing material: Galvanized steel

	Unit of measurement	EKH 150-3.6
Connected air duct size	mm	150
Phases	-	3
Minimum supply voltage	V	400
Maximum supply voltage	V	400
Power supply frequency	Hz	50
Rated power	W	3600
Weight	kg	2.8

Dimensions

ØD	B	H	L	L1
149	120	255	306	226

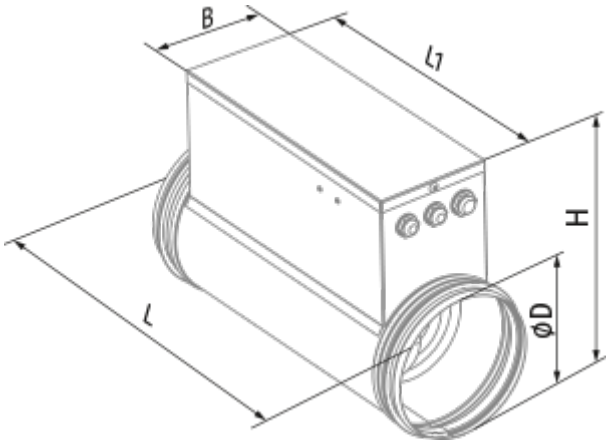
B
L1
H
ØD
L