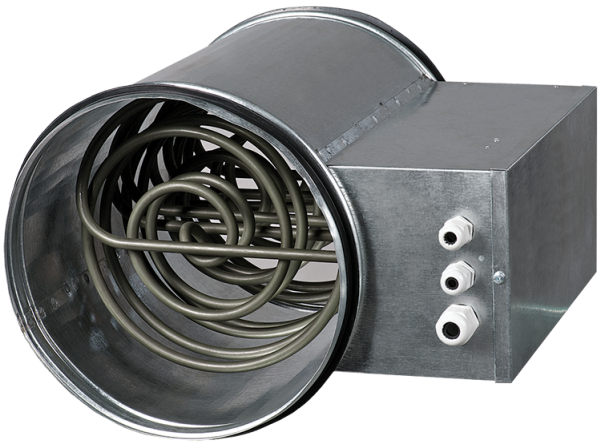

EKH 150-1.7

Duct electrical heaters for round ducts

- Casing material: Galvanized steel

	Unit of measurement	EKH 150-1.7
Connected air duct size	mm	150
Phases	-	1
Minimum supply voltage	V	230
Maximum supply voltage	V	230
Power supply frequency	Hz	50
Rated power	W	1700
Weight	kg	2

Dimensions

ØD	B	H	L	L1
149	120	255	306	226

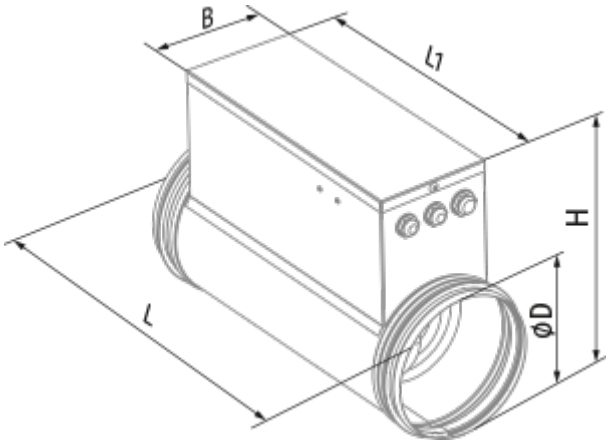
B
L1
H
ØD
L