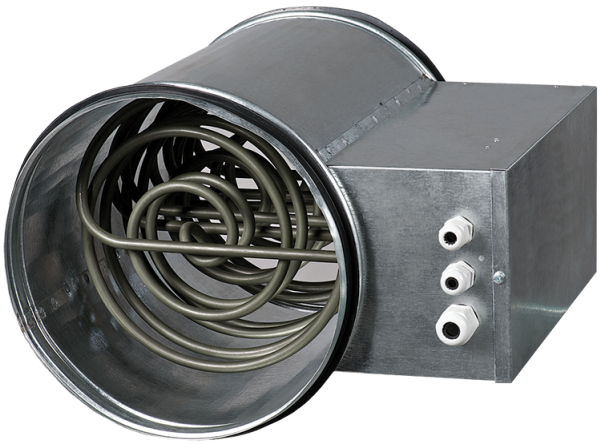

EKH 100-1.8

Duct electrical heaters for round ducts

- Casing material: Galvanized steel

	Unit of measurement	EKH 100-1.8
Connected air duct size	mm	100
Phases	-	1
Minimum supply voltage	V	230
Maximum supply voltage	V	230
Power supply frequency	Hz	50
Rated power	W	1800
Weight	kg	1.7

Dimensions

ØD	B	H	L	L1
99	94	207	376	296

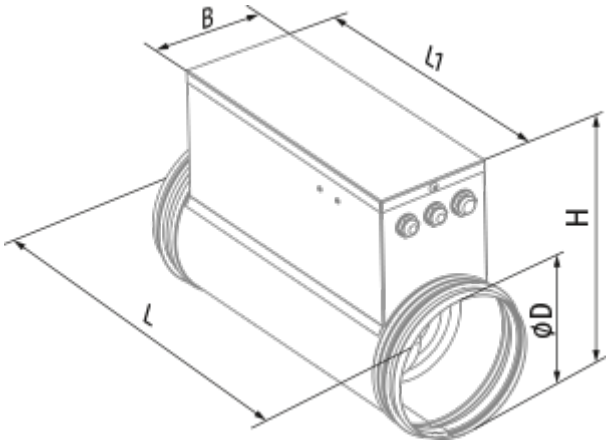
B
L1
H
ØD
L