

CDTE E/0-10

Speed controller for EC motors

	Unit of measurement	CDTE E/0-10
Weight	kg	0.12
Ambient air temperature max	°C	35
Ingress protection rating	-	IP40

Dimensions

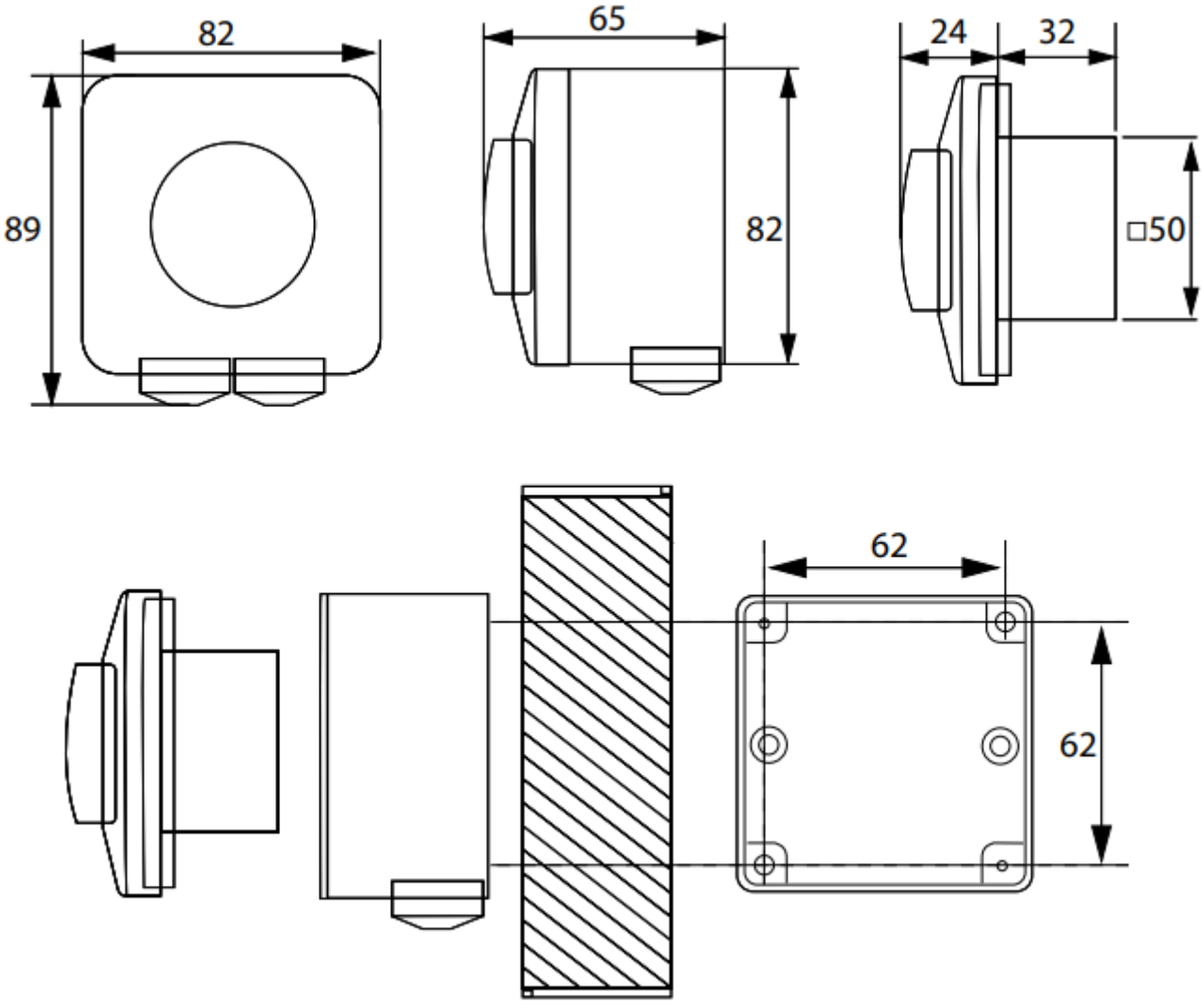
82
89
65
82
24
32
□50
62
62