

Belimo LF24

Electric actuators

	Unit of measurement	Belimo LF24
Minimum supply voltage	V	24
Maximum supply voltage	V	24
Power supply frequency	Hz	50/60
Rated power	W	5
Weight	kg	1.4
Ambient air temperature min	°C	-30
Ambient air temperature max	°C	50
Ingress protection rating	-	IP54

Dimensions

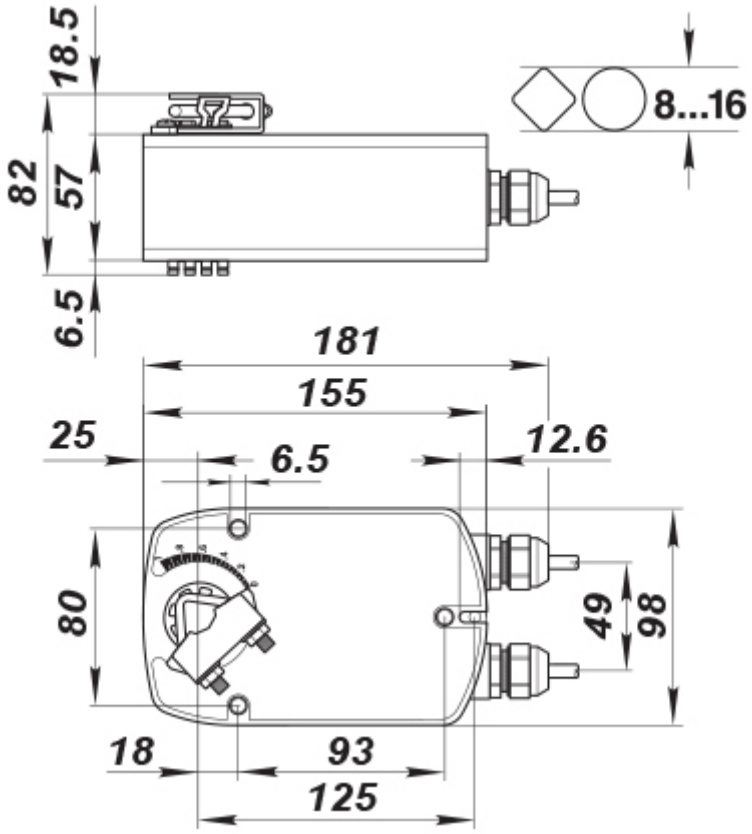
18.5
82
57
6.5
8...16
181
155
25
6.5
12.6
80
49
98
18
93
125