

# Axis-F 500 4E (220V/60Hz)

Axial inline fans

- Impeller type: Axial
- Casing material: Coated steel
- Installation in any position

| | Unit of measurement | Axis-F 500 4E (220V/60Hz) |
|---|---|---|
| Connected air duct size | mm | 500 |
| Phases | - | 1 |
| Minimum supply voltage | V | 220 |
| Maximum supply voltage | V | 240 |
| Power supply frequency | Hz | 60 |
| Weight | kg | 11 |
| Transported air temperature (max) | °C | 50 |
| Transported air temperature (min) | °C | -30 |
| Ingress protection rating | - | IP24 |
| Ingress protection rating of the drive | - | IP54 |
| Impeller material | - | Coated steel |

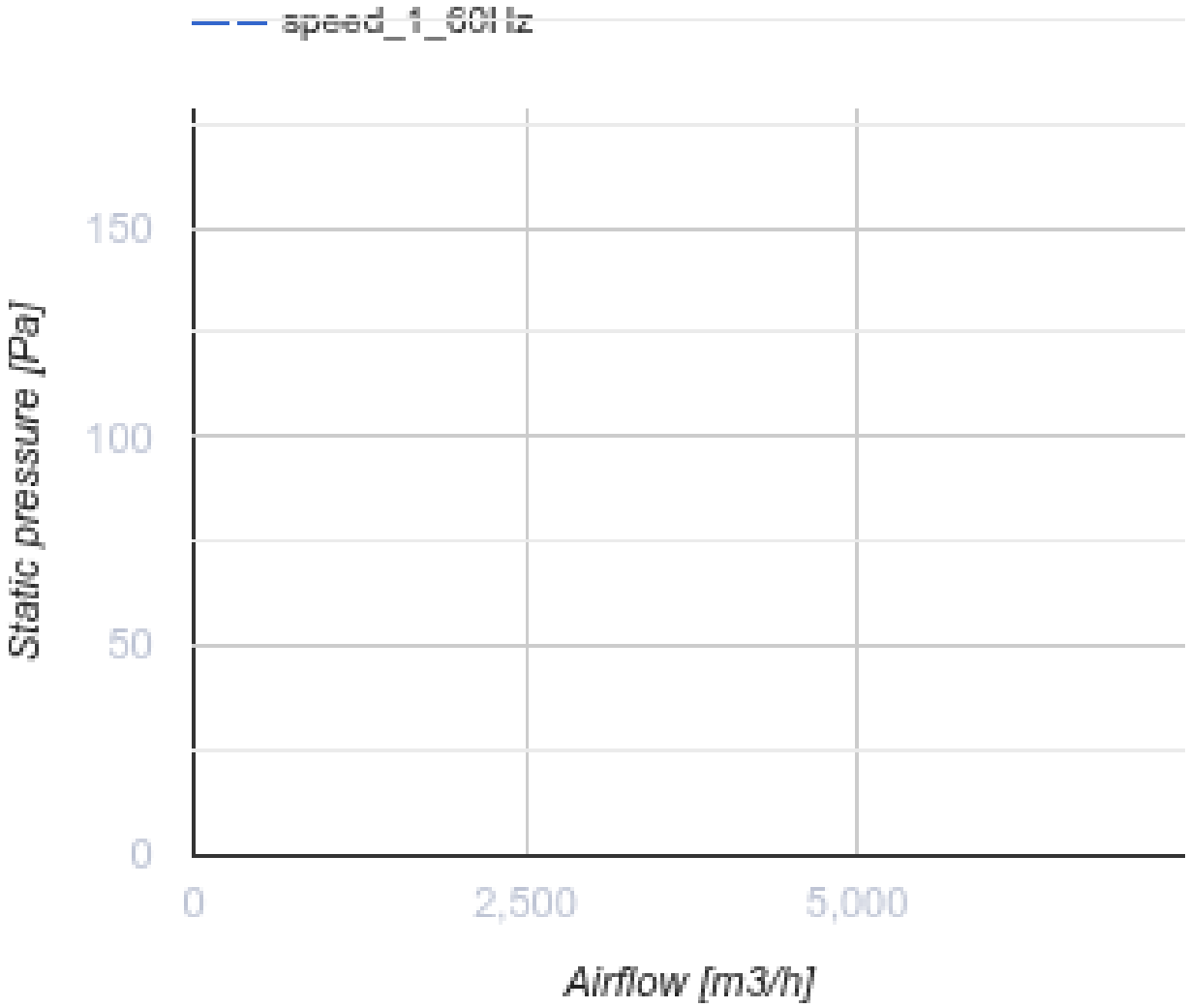
speed_1_60Hz
150
100
50
0
Static pressure [Pa]
0
2,500
5,000
Airflow [m3/h]

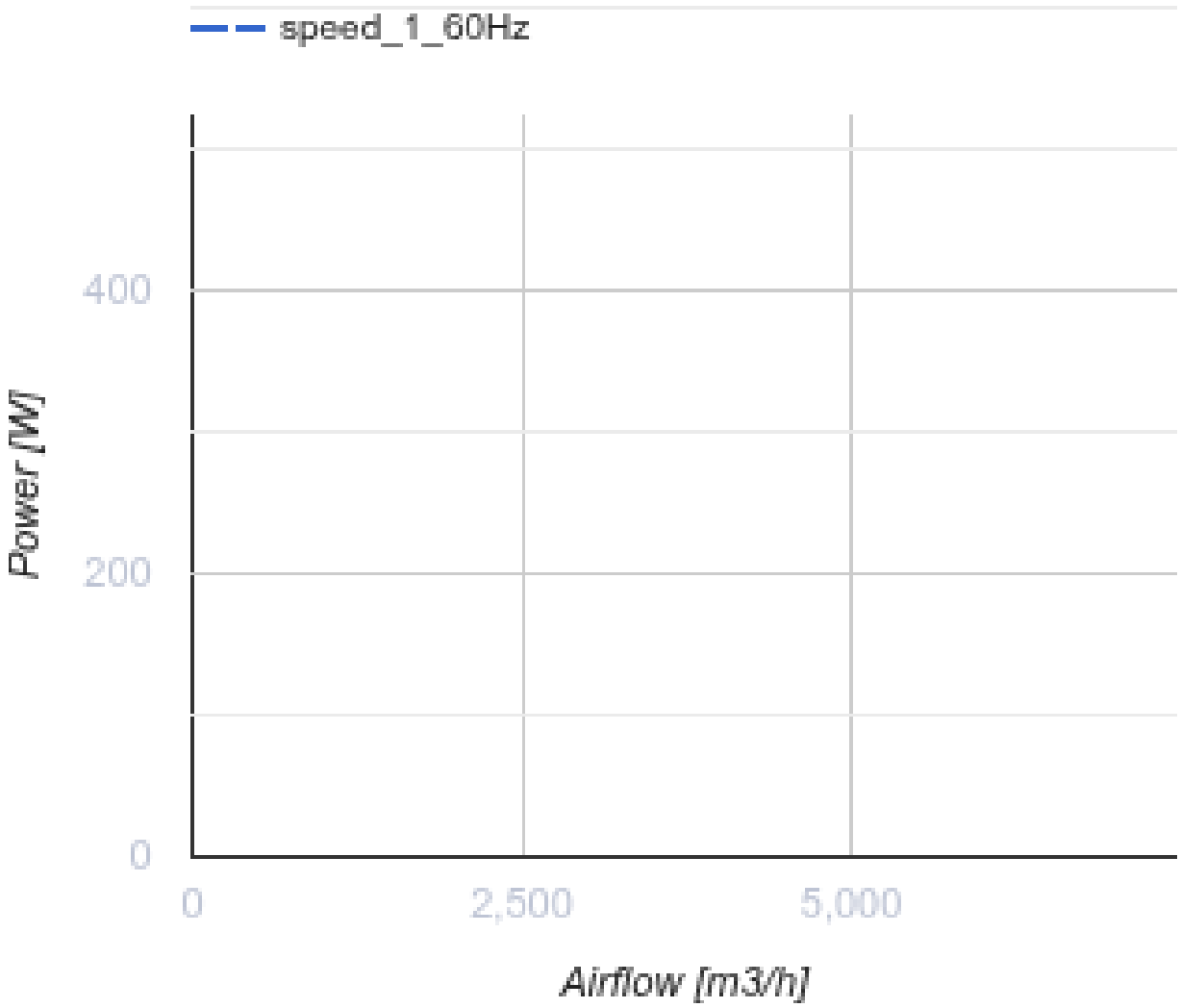


## Dimensions

| ØD | ØD1 | ØD2 | Ød | B | L |
|---|---|---|---|---|---|
| 515 | 541 | 570 | 9,5 | 600 | 220 |

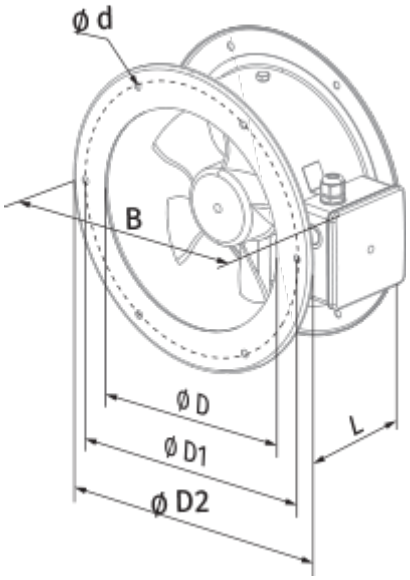
Ø d
B
Ø D
Ø D1
Ø D2
L

## Ecodesign

| | |
|---|---|
| Trademark | Blauberg |
| Model | Axis-F 500 4E (220V/60Hz) |
| Type of drive installed | External MSD or VSD |
| Type of heat recovery system | None |
| Nominal external pressure (Pa) | 100 |
| Maximum external leakage rates (%) | 2.7 |
| Static efficiency (%) | 32.1 |
| Declared typology | NRVU UVU |
| Effective electric power input (kW) | 0.44 |
| Sound power level (dB(A)) | 89 |