

Axis-F 300 2D

Axial inline fans

- Sound pressure level LpA at 3 m: 52
- Impeller type: Axial
- Casing material: Coated steel
- Installation in any position

	Unit of measurement	Axis-F 300 2D
Connected air duct size	mm	300
Phases	-	3
Minimum supply voltage	V	400
Maximum supply voltage	V	400
Power supply frequency	Hz	50 | 60
Rated power	W	145
Unit current	A	0.25
Maximum airflow	m^3/h	2310
Rotation speed at 50hz	-	2350
Sound pressure level LpA at 3 m	dB(A)	52
Weight	kg	5.7
Transported air temperature (max)	°C	60
Transported air temperature (min)	°C	-30
Ingress protection rating	-	IP24
Ingress protection rating of the drive	-	IP54
Impeller material	-	Coated steel

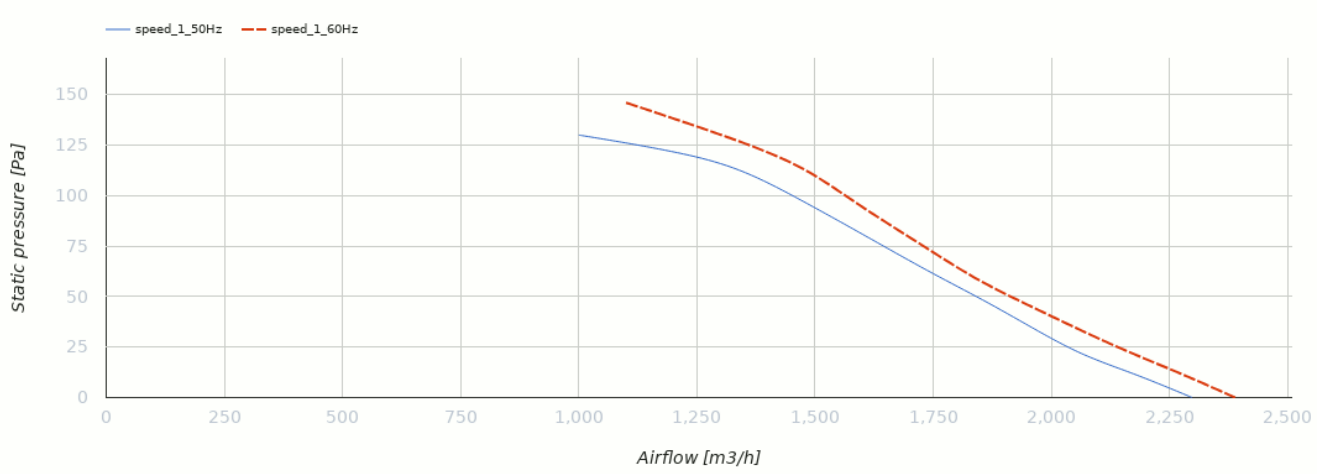

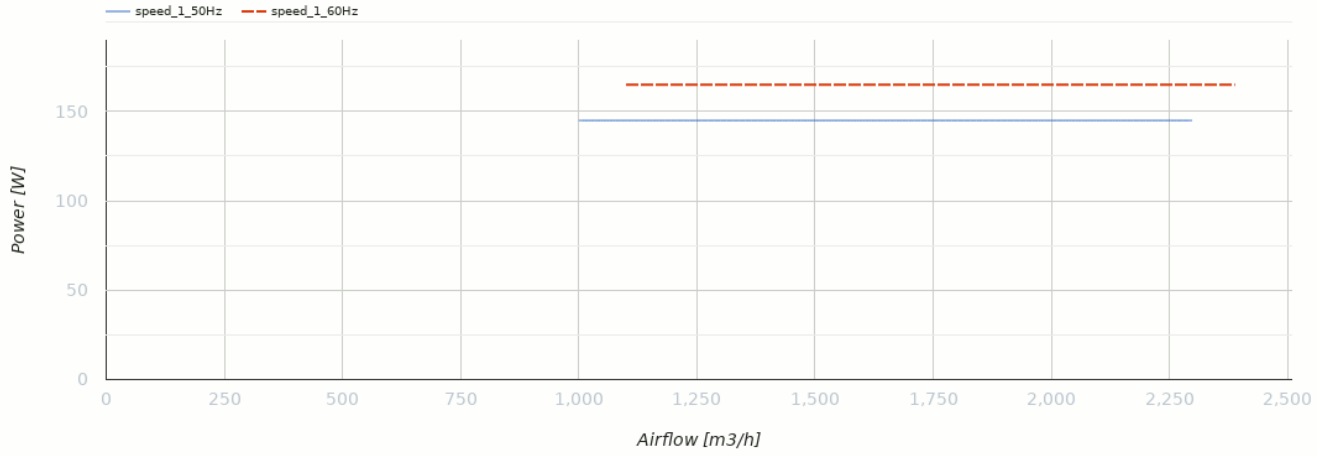

Dimensions

ØD	ØD1	ØD2	Ød	B	L
310	356	382	7,0	410	160

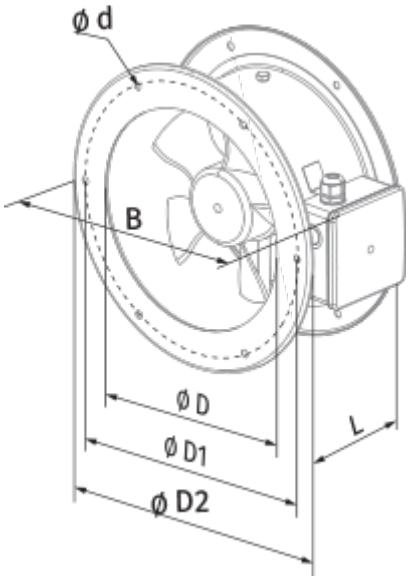
Ø d
B
Ø D
Ø D1
Ø D2
L

Ecodesign

Trademark	Blauberg
Model	Axis-F 300 2D
Type of drive installed	External MSD or VSD
Type of heat recovery system	None
Nominal external pressure (Pa)	110
Maximum external leakage rates (%)	2.7
Static efficiency (%)	30.2
Declared typology	NRVU UVU
Sound power level (dB(A))	80
Effective electric power input (kW)	0.141

Accessories

Thyristor speed controllers

Name	Photo	Description
CDT E1.8		Thyristor speed controller